>pDRIVE<

Mounting instructions

>pDRIVE< MX eco 4V

>pDRIVE< MX pro 4V

>pDRIVE< MX pro 6V

>pDRIVE< MX multi-eco

>pDRIVE< MX multi-pro

Software APSpro_B04 and higher

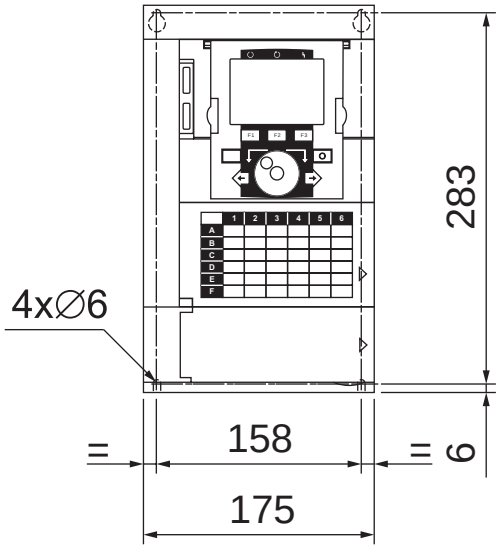

General remarks

The following symbols should assist you in handling the instructions:

Advice, tip !

General information, note exactly !

The requirements for successful commissioning are correct selection of the device, proper planning and installation. If you have any further questions, please contact the supplier of the device.

Capacitor discharge !

Before performing any work on or in the device, disconnect it from the mains and wait at least 15 minutes until the capacitors have been fully discharged to ensure that there is no voltage on the device.

Automatic restart !

With certain parameter settings it may happen that the frequency inverter restarts automatically when the mains supply returns after a power failure. Make sure that in this case neither persons nor equipment is in danger.

Commissioning and service !

Work on or in the device must be done only by duly qualified staff and in full compliance with the appropriate instructions and pertinent regulations. In case of a fault contacts which are normally potential-free and/or PCBs may carry dangerous voltages. To avoid any risk to humans, obey the regulations concerning "Work on Live Equipment" explicitly.

Terms of delivery

The latest edition "General Terms of Delivery of the Austrian Electrical and Electronics Industry Association" form the basis of our deliveries and services.

Specifications in this document

We are always anxious to improve our products and adapt them to the latest state of the art. Therefore, we reserve the right to modify the specifications given in this document at any time, particular those referring to weights and dimensions. All planning recommendations and connection examples are non-binding suggestions for which we cannot assume liability, particularly because the regulations to be complied depend on the type and place of installation and on the use of the devices.

All foreign-language translations result from the German or English version. Please consider those in case of unclarity.

Basis of contract

The specifications in text and drawings of this document are no subject of contract in the legal sense without explicit confirmation.

Regulations

The user is responsible to ensure that the device and its components are used in compliance with the applicable regulations. It is not permitted to use these devices in residential environments without special measures to suppress radio frequency interferences.

Trademark rights

Please note that we do not guarantee that the connections, devices and processes described herein are free from patent or trademark rights of third parties.

Copyright

Layout, equipment, logos, texts, diagrams and pictures of this document are copyrighted. All rights are reserved.

Mounting of the frequency inverters
>pDRIVE< MX pro 4V

0.75 to 630 kW, 3 AC 380 to 480 V

Parameters and their settings refer to software version APSpro_B04 and higher

HMHF

8 P01 325 EN.04/04

Theme	Page
Remarks	3
Safety	3
Touch voltages	3
Inappropriate operation of the inverter	3
Checking the mains voltage	4
Capacitor discharge	4
Unexpected restart of the inverter	5
Reset of application data	5
Device replacement	5
Receiving the device	6
Handling the inverter	6
Storage	7
General specification	8
Quality	8
CE marking	8
Installation regulations	8
EMC product standard for PDS EN 61800-3	9
Mains conditions	12
Mains voltage	12
Fuses	12
Braking unit / Braking resistor	12
Nongrounded mains	13
Radio interferences	14
Mains current harmonics / Mains voltage distortion	15
12-pulse supply	15
Mains impedance / Short-circuit current	16
Power factor correction systems	16
Switching rate	16
Protection of the plant	17
Responsibility	17
Frequencies > 60 Hz	17
Overvoltage protective circuit	17
Automatic restart	17
Earth leakage circuit breaker	18
Locking of the frequency inverter	18
Connecting and disconnecting the motor	19
Operation of ATEX motors in explosive atmospheres	19
Insulation measurements	19
Specification of the inverter	21
Technical data	21
Wiring and connection	24
Wiring diagram	24
Fuses and cable cross sections	28
DC coupling	31
External fan supply	34
Basic notes for connection	36
Notes for wiring the power terminals	38
Specification of the control terminals	41

Theme	Page
Installation remarks	48
Wall-mounting	48
Cubicle installation IP23	49
Cubicle installation IP54	50
Dimensions	51
>pDRIVE< MX pro 4V0,75…4V2,2	51
>pDRIVE< MX pro 4V3,0…4V4,0	52
>pDRIVE< MX pro 4V5,5…4V7,5	53
>pDRIVE< MX pro 4V11	54
>pDRIVE< MX pro 4V15…4V18	55
>pDRIVE< MX pro 4V22	56
>pDRIVE< MX pro 4V30…4V37	57
>pDRIVE< MX pro 4V45…4V75	58
>pDRIVE< MX pro 4V90/110	59
>pDRIVE< MX pro 4V110/132	60
>pDRIVE< MX pro 4V132/160	61
>pDRIVE< MX pro 4V160/200	62
>pDRIVE< MX pro 4V200/250 … 4V250/315	63
>pDRIVE< MX pro 4V315/400	64
>pDRIVE< MX pro 4V400/500	66
>pDRIVE< MX pro 4V500/630	68
Braking unit *>pDRIVE< BU 4V420*	71
Braking unit *>pDRIVE< BU 4V750*	75
Options	79
Operating options	79
Door mounting kit DMK11	80
Control terminals	81
Control options	82
Fieldbus Modbus	82
Fieldbus adapter ADAP-CAN for CANopen	84
Installing of an option card	85
Fieldbus card PBO11 for Profibus DP	86
Terminal extension IO11 and IO12	87
Speed feedback SFB	88
External options	90
Radio frequency interference filter RFI	90
DC choke DCL	93
Line reactor NDU	98
Footprint kit FPK	100
Braking resistor BR	101
Output motor filter AMF	104
Sinus motor filter SMF	108
Terminal box TER-BOX	111
Flange mounting kit FLANGE	115
Cubicle mounting kit CMK	121
Replacement kit RMK	124

8 P01 325 EN.04/04 HMHF

Remarks

Safety

Read this instructions carefully before using the frequency inverter and absolutely observe the following safety notes !

Touch voltages

- Read this instructions completely and carefully before installing and operating the *>pDRIVE< MX pro* frequency inverter. Installation, adjustment and repairs must be performed by qualified personnel.
- The user is responsible for compliance of the protective grounding of all devices with the applicable international and national electrical standards concerning electrical units.
- Many components of the frequency inverter, including the printed circuits, are supplied with mains voltage. Do not touch these components.

  Use only electrically insulated tools.
- Do not touch unscreened components or terminal screws when the device is energized.

  Do not short the terminals PA/+ and PC/- as well as the DC link capacitors.
- Install and close all covers before energizing the inverter.
- Execute the following precautions before maintenance or repair of the frequency inverter:
  - Disconnect the power supply.
  - Place a label with the notation "DO NOT TURN ON" on the circuit breaker or disconnecting switch of the frequency inverter.
  - Lock the circuit breaker or disconnecting switch in the opened position.
- Before any work, disconnect the frequency inverter from the mains as well as from the external supply of the control part, if existing. Wait until the charging LED is completely lapsed. Measure the voltage of the DC link in order to check whether the DC voltage is below 45 V. The LED of the frequency inverter which indicates the present DC link voltage is not sufficient.

HMHF

8 P01 325 EN.04/04

Electric shock may result in death or serious injury.

Inappropriate operation of the inverter

The requirements for successful commissioning are correct selection of the device, proper planning and installation.

Especially observe remarks and specifications regarding ambient conditions and cooling in order to ensure trouble-fee operation.

Non-observance of these precautions may cause material damage.

Checking the mains voltage

Please ensure that the mains voltage corresponds with the nominal voltage of the frequency inverter before you switch the inverter on to configure it.

An incompatible mains voltage may cause damage of the inverter.

Capacitor discharge

Disconnect the frequency inverter before performing any work on or in the device and wait until the red LED which indicates the charging of the capacitors is lapsed. Then measure the voltage of the DC bus.

The red LED lights when there is voltage at the DC bus.

>*pDRIVE< MX pro* 4V0,75...4V18

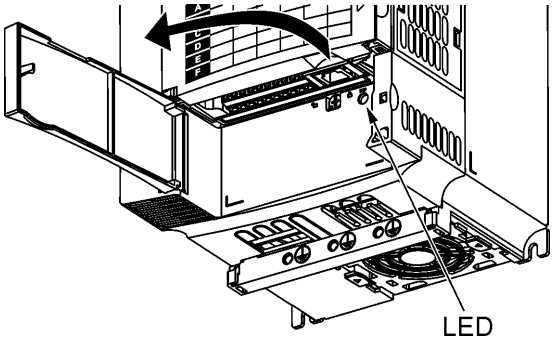

>*pDRIVE< MX pro* 4V22...4V75

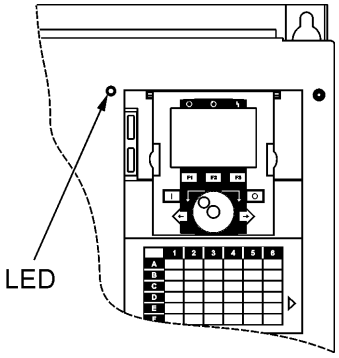

>*pDRIVE< MX pro* from 4V90/110

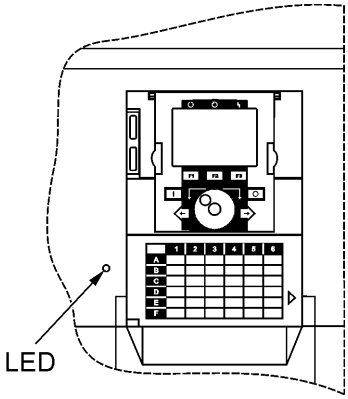

Measuring the voltage at the DC bus

The voltage of the DC bus can exceed 800 V DC (at 690 V: 1000 V DC).

Measure the voltage of the DC bus with a suitable measuring instrument as described below:

1. Disconnect the power supply.
2. Wait 15 minutes until the DC link capacitors are discharged.
3. Measure the voltage of the DC bus between the terminals PA/+ and PC/- in order to check whether the voltage is below 45 V DC.

Please contact our local distributor if the DC link capacitors do not completely discharge (do not repair or activate the inverter).

Unexpected restart of the inverter

- To avoid an unintentional restart please ensure that the input PWR ("Safe Standstill", Power Removal) is deactivated (state 0) before you switch the >*pDRIVE*< *MX pro* on to configure the device.
- Before switching on the device or if you exit the simulation mode, please ensure that the inputs which are used as start commands are deactivated (state 0) because they promptly could cause a start of the motor.

Non-observance of these precautions may cause death or severe injury.

HMHF

If an unintentional restart of the >*pDRIVE*< *MX pro* must be prevented to ensure safety of the operating personnel, the electronic locking can be provided by the function "Safe Standstill" (Power Removal). This function requires the use of a wiring diagram which complies with the requirements of category 3 according to the EN 954-1 / ISO 13849-1 standard and safety level 2 according to IEC/EN 61508 (further information are given in the catalogue or on the CD-ROM which is attached to each inverter).

8 P01 325 EN.04/04

The Power Removal function (PWR) has higher priority than each start command.

Reset of application data

The application data are reset by loading macro M1.

When loading a macro, all existing application data in the active set of parameters are overwritten. Parameter groups such as motor data, language setting, fault memory, operating hours, texts and basic communication settings remain unchanged.

If the application data are reset, the safety of the plant must be guaranteed!

Please ensure that e.g. starting due to preset digital inputs or lifting of a mechanical brake is prevented.

Device replacement

If you replace a frequency inverter, please check whether the electrical connection of the >*pDRIVE*< *MX pro* corresponds to the wiring comments given in this instructions.

Receiving the device

Handling the inverter

Before installation the inverter should be packaged during movement and storage to protect the device. Ensure that the ambient conditions are permitted.

Open the packaging and check whether >*pDRIVE*< *MX pro* was not damaged during transport.

If the device is damaged, do not install the inverter and do not operate the device !
Otherwise material damage may occur.

The manufacturer does not bear responsibility for damages which result from transport or unpacking. In this case please inform the insurance company.

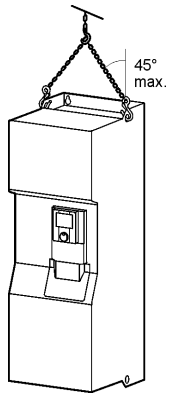

The >*pDRIVE*< *MX pro* inverters can be unpacked without any tools.

In case of bigger inverter types a hoist is necessary to install the device. Therefore they are equipped with handling lugs.

HMHF
8 P01 325 EN.04/04

Check whether the specification on the name plate complies with those of the order.

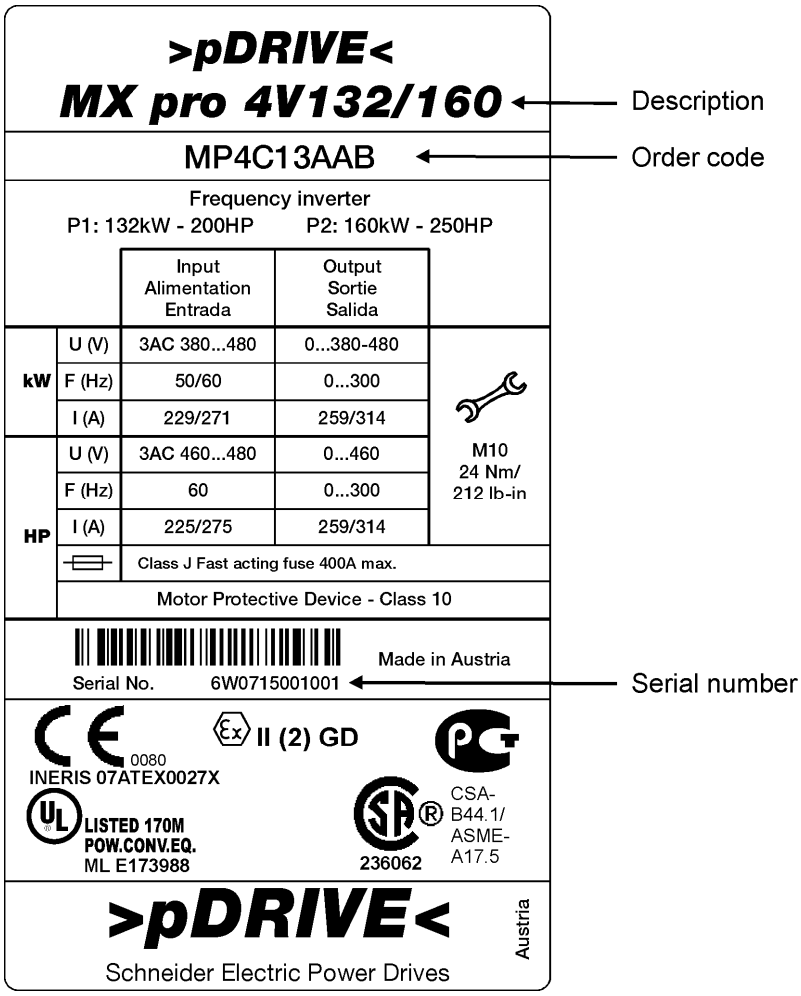

Storage

Storage temperature -25°C to 70°C

When the inverter was disconnected over a longer period, the performance of its electrolytic capacitors is reduced. But due to the "active balancing system" no special treatment of the frequency inverter is necessary when the maximum storage time has not been exceeded:

- 12 months at a maximum storage temperature of +50°C
- 24 months at a maximum storage temperature of +45°C
- 36 months at a maximum storage temperature of +40°C

When the maximum storage temperature has been exceeded, the inverter has to be applied with mains voltage for about one hour (forming the electrolytic capacitors) before pulse enable takes place. We recommend to execute this process already after a shutdown period of 6 months.

Non-observance of these precautions may cause material damage.

General specification

Quality

CE marking

All devices and drives of the electric drive engineering may cause electromagnetic interferences and otherwise they may be influenced by such interferences. Therefore, they are subject to the **EMC directive 2004/108/EEC** since 1.1.1996.

The frequency inverters have an operating voltage which is clearly in the range of 50...1000 V AC or 75...1500 V DC. Therefore, they are also subject to the **Low-voltage directive 2006/95/EEC** since 1.1.1997.

Because of the radio frequency interference filters which are built into the frequency inverters they are in conformity with **EN 61800-3** and **EN 61800-5-1**.

Frequency inverters are not considered as machines with at least one mechanically moving part. Therefore, they are not subject to the Machine directive 2006/42/EEC.

Frequency inverters are a product of the restricted sales according to IEC 61800-3. In a residential environment this product can cause radio frequency interferences whereupon the user can be called on to take suitable measures.

The frequency inverters have a CE marking on the rating plate. However, it is necessary to observe the installation regulations to achieve the corresponding limits.

Installation regulations

- The *>pDRIVE< MX pro* frequency inverters include a RFI filter for industrial environment as standard (MX eco 4V & pro 4V for residential environment up to 4.0 kW). In case of long motor cables and for the use in residential environment the implementation of an additional external filter is necessary to reduce the current harmonics on the mains caused by the DC link.
- Installation on a well-grounded metallic mounting plate with good HF connection between motor cable screen and filter
- Use of screened motor cables, proper connection of the motor cables on both ends or proper laying in a metallic, closed and interconnected cable conduit
- Use of an output motor filter in case of high motor cable lengths
- Use and proper connection of screened control cables
- Grounding of the frequency inverter for human protection with at least 10 mm^2
- Consider the protective separation when preparing control lines and coupling relays
- Laying of the motor cables separated from other cables, especially from the control wiring

HMHF
8 P01 325 EN.04/04

EMC product standard for PDS (Power Drive Systems) EN 61800-3

For frequency inverter drives the product standard EN/IEC 61800-3 edition 2 appeared. It has first priority over the existing general standards (generic standards). If a drive is installed into another device for which a separate EMC product standard exists, then this standard applies.

The aim of the EMC directive **2004/108/EC** is the ability of electric and electronic installations to operate satisfactorily in their electromagnetic environment without influencing the environment or other loads therein.

Therefore, the PDS product standard contains both limits for admissible interferences and requirements for the necessary interference resistance.

The power drive standard EN 61800-3 covers the complete drive from the mains supply to the motor shaft.

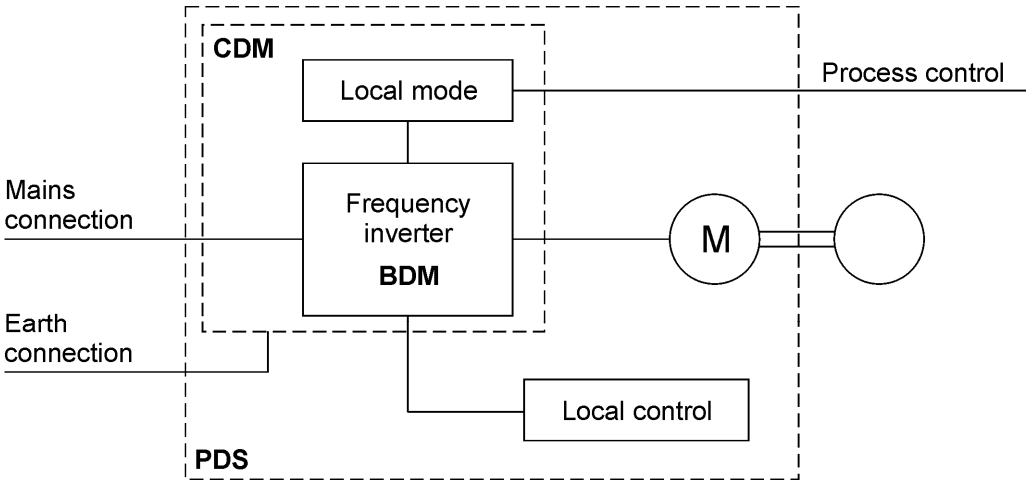

HMHF

BDM:	Base-Drive-Module	Basic drive consisting of the power part and the control electronics (e.g. frequency inverter - built-in unit)
CDM:	Complete-Drive-Module	Drive modules consisting of BDM (basic drive) and extensions, if existing (e.g. cubicle including RFI filter, AMF, line contactor, ...)
PDS:	Power-Drive-System	Drive system consisting of CDM (drive module) and motor, motor cable, local control, power transformer, ... (e.g. the complete electric drive of a machine)

8 P01 325 EN.04/04

The differentiation in respect of the sales method and the range of use is essential for the handling of frequency inverters.

Use in residential environment

Drives which are connected without an intermediate transformer to the power supply network which also supplies residential areas. The standard refers to these application areas as "first environment".

The valid limits for interferences are very low and can only be observed by compliance with all installation instructions.

Category C1

Use in residential environments with general sales (unrestricted to every person)

Conducted interferences

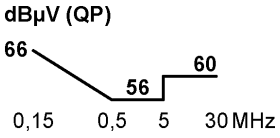

Radiation

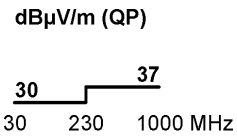

The admissible limits for interferences comply with the applied standard EN 55011 class B; i.e. 66-56/56/60 dB(µV) quasi-peak and 30/37 dB(µV/m) at a distance of 10 m.

Category C2

Use in residential environments with restricted sales (only EMC qualified resellers)

Conducted interferences

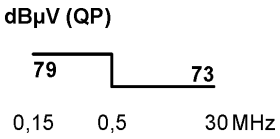

Radiation

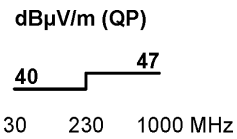

All drives must comply with the limits of interferences of the former class A group 1.

i.e. 79/73/73 dB(µV) quasi-peak and 40/47 dB(µV/m) at a distance of 10 m

HMHF

8 P01 325 EN.04/04

Use in industrial environment

The standard refers to these application areas as "second environment". These are areas which are separated from the public network by means of an own transformer.

The use must ensure that the suppression components recommended by the manufacturer are used and that the introductions of the manufacturer are observed. Moreover, the user must ensure that strong interferences do not couple into neighbouring low-voltage networks.

If the neighbouring network is a public network with residential areas, the limits 66-56/56/60 dB(µV) quasi-peak apply. In case of industrial networks the higher limits 79/73/73 dB(µV) quasi-peak can be used.

Furthermore, it is necessary to enhance the suppression of interferences if other devices are influenced. The operator of the plant is responsible for this improvement.

The limits for immunity are much stricter because they are based on a generally higher level of interferences.

Category C3

Use in industrial environments

Conducted interferences
drive ≤ 100 A
dBµV (QP)

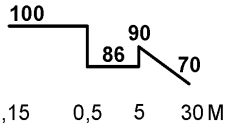

Radiation
dBµV/m (QP)

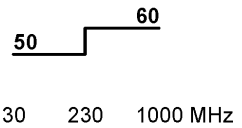

For drives with a size ≤ 100 A the admissible limits for interferences are 100/86/90-70 dB(µV) quasi-peak and 50/60 dB(µV/m) at a distance of 10 m (class A group 2).

Conducted interferences
drive > 100 A
dBµV (QP)

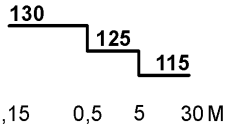

Radiation
dBµV/m (QP)

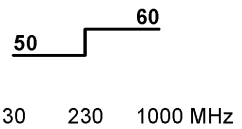

For drives with a size > 100 A the admissible limits for interferences are 130/125/115 dB(µV) quasi-peak and 50/60 dB(µV/m) at a distance of 10 m (class A group 2).

Category C4

Use in industrial environments for drives > 1000 V or > 400 A

For this drives are no limits defined. An EMC concept has to be compiled within project planning.

In case of non-grounded mains it is usually not possible to keep the limits. Filter capacitors make detection of insulation faults difficult and thus they interfere with the concept of a floating power supply. However, filters which are developed especially for IT mains can be used because they also cause a high reduction of the conducted interferences in non-grounded mains.

The basic requirements for compliance with the relevant limits are the observance and compliance of the installation requirements and the use of the recommended options.

Mains conditions

Mains voltage

The >*pDRIVE*< *MX pro* devices are designed for the following mains voltages:

3 AC 380 V -15 % up to 440 V +10 %, 50 Hz ± 5 %
3 AC 380 V -15 % up to 480 V +10 %, 60 Hz ± 5 %

The existing nominal mains voltage must be set at the inverter by means of a parameter. Thereby an optimal adjustment of the undervoltage protective function takes place.

Fuses

The >*pDRIVE*< *MX* frequency inverters do not contain any input fuses. These must be provided externally (see chapter "Fuses and cable cross sections") to protect the power cables from overload and to protect the input rectifier in the event of an internal short circuit.

It is recommended to use super fast (semiconductor) fuses. Standard fast fuses or circuit breakers can also be used but the rectifier could be damaged in case of an internal fault.

Braking unit / Braking resistor

The >*pDRIVE*< *MX pro* frequency inverters have parameters to monitor the braking power.

If the braking resistor does not match the overload characteristic to be used or the local regulations require an additional protective device, a thermal relay should be integrated into the mains disconnection mechanism.

The correct setting of the braking parameters is essential for the protection of the braking resistor in normal operation. In case of malfunction of the internal braking transistor or of the external braking unit, the braking resistor can be only protected by mains disconnection. Therefrom, a line contactor is necessary when using the braking function. Furthermore, the use of the function "Line contactor control" is recommended.

HMHF
8 P01 325 EN.04/04

Nongrounded mains

The use of the >*pDRIVE*< *MX pro* frequency inverters is basically in all mains variants permitted. But >*pDRIVE*< *MX pro* 6V devices must not be operated in "Corner Grounded Networks".

For nongrounded mains (typical for industrial mains) the built-in radio frequency interference filter has to be adapted by means of switch-over/reconnection. In this case the maximal allowed pulse frequency is 4 kHz.

>*pDRIVE*< *MX pro* 4V0,75...4V75 (2 switches at MX pro 4V22)

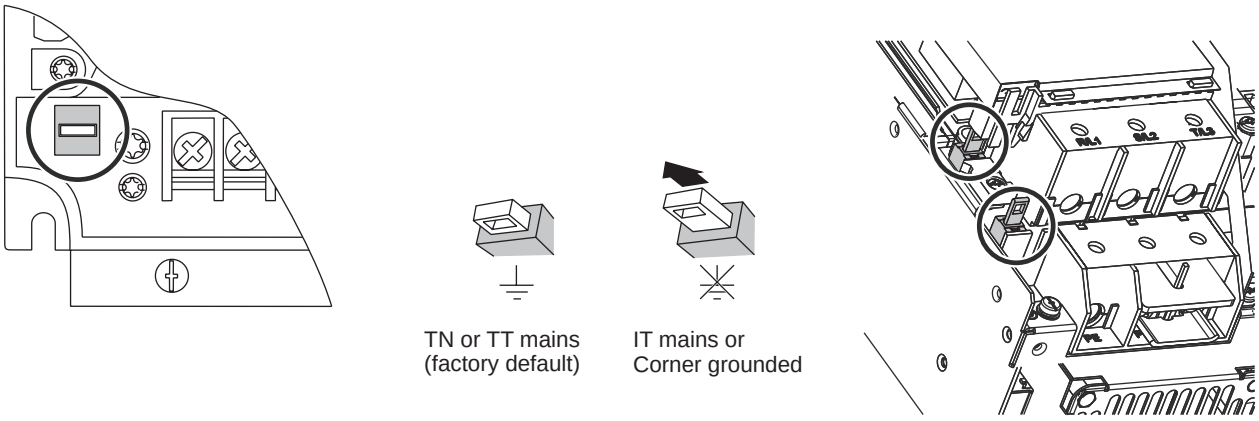

>*pDRIVE*< *MX pro* 4V90/110...4V110/132

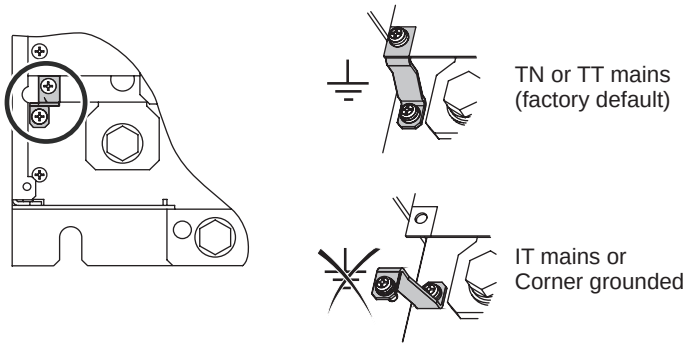

>*pDRIVE*< *MX pro* 4V132/160...4V160/200

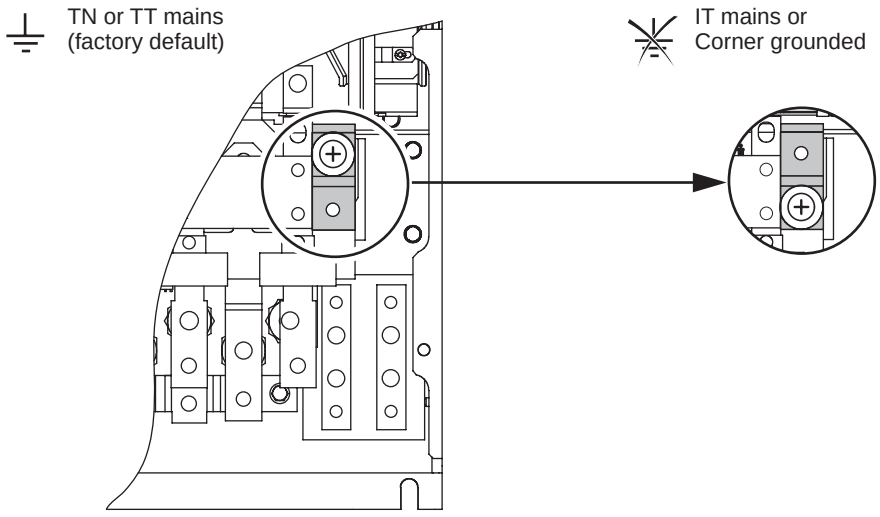

>*pDRIVE*< *MX pro* 4V200/250...4V500/630 (2 screws at MX pro 4V400/500...4V500/630)

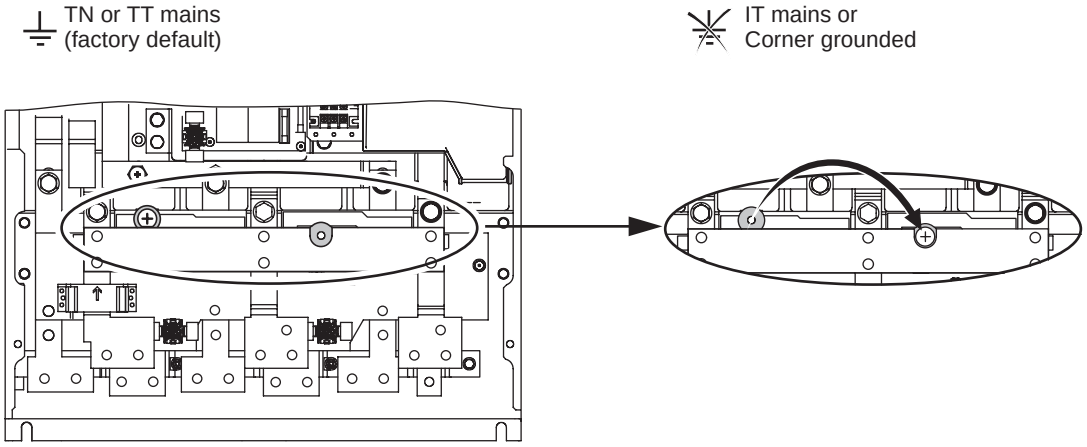

In case of nongrounded mains a single earth fault in the supplying mains has no effect to the function of the inverter. If the earth fault occurs in the motor or the motor cables, the inverter is switched off. But the recognition heavily depends on the earth capacitance of the mains.

Due to human protection, in IT mains only the use of special RFI filters with very low leakage current is permitted (increase of earth capacitance).

The filter option >*pDRIVE*< *RFI* is not qualified for the use in IT mains !

Radio interferences

The >*pDRIVE*< *MX* inverters include a radio frequency interference filter as standard. Depending on the device size, those filters comply with the requirements for categories C2 or C3 according to EN/IEC 61800-3.

Device	Category
>*pDRIVE*< *MX eco & pro* 4V0,75 ... 4V4,0	C2 residential environment – EMC-versed user (in the past: EN 55011 class A group 1)
>*pDRIVE*< *MX eco & pro* from 4V5,5 >*pDRIVE*< *MX pro* 6V	C3 industrial environment (in the past: EN 55011 class A group 2)

For using inverters of higher power in residential environment and in case of longer motor cables, additional filters option >*pDRIVE*< *RFI* must be used.

Frequency inverters are a product of the restricted sales according to IEC 61800-3. In a residential environment this product can cause radio frequency interferences whereupon the user can be called on to take suitable measures.

HMHF
8 P01 325 EN.04/04

Mains current harmonics / Mains voltage distortion

Because of using a diode rectifier on the input of the inverter harmonics occur in the mains current which lead to a voltage distortion of the supplying mains.

There are several possibilities to reduce this current harmonics and to decrease the total mains current:

- Use of a DC choke option >*pDRIVE*< *DCL*

  This external option is available for the devices >*pDRIVE*< *MX eco* & *pro* 4V0,75...4V75 with protection degree IP20. For devices from 90 kW a DCL box with protection degree IP31 is available.

- Use of a three-phase choke option >*pDRIVE*< *NDU* in the mains lines

  For all devices >*pDRIVE*< *MX eco* & *pro* from 4V15 (>*pDRIVE*< *MX pro* 6V from 2,2/3,0) a well-adapted line reactor is available as an external option.

- Installation of a mains current harmonic filter option >*pDRIVE*< *HF*

  This option is available for the devices >*pDRIVE*< *MX eco* & *pro* from 4V4,0.

- 12-pulse-connection

  The supply results from a separate transformer with two out-of-phase secondary windings.
  The following devices are prepared for 12-pulse-supply as standard:

  >*pDRIVE*< *MX eco* 4V500...4V630
  >*pDRIVE*< *MX pro* 4V400/500...4V500/630
  >*pDRIVE*< *MX pro* 6V400/500…6V630/800

12-pulse supply

The following inverters are standard equipped with two parallel input rectifiers and therefore are suitable for a 12-pulse rectification:

>*pDRIVE*< *MX eco* 4V500...4V630

>*pDRIVE*< *MX pro* 4V400/500...4V500/630

>*pDRIVE*< *MX pro* 6V400/500...6V630/800

The supply results from a separate transformer with two out-of-phase secondary windings (e.g. Yy6 d5).

On the main side of the transformer the 5th and 7th current harmonics are practically non-existent as they have been cancelled by the shifted transformer windings.

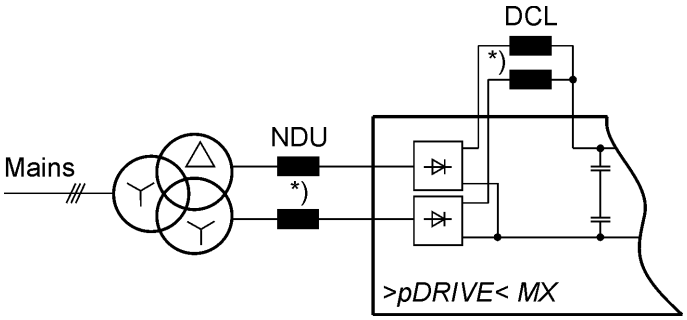

*) Line chokes (or alternatively DC chokes) are only necessary if a transformer is used for several inverters or if the transformer power is notedly larger than the inverter power (see chapter "Mains impedance / Short-circuit current", page 16).

The transformer must keep to the following tolerances in order to guarantee a constant current sharing:

Tolerance of the secondary voltages to each other: 0.3 % of V_{NOM}
Tolerance of the relative short circuit voltage: ± 5.0 % of v_{SC_NOM}

The nominal output voltage of a transformer is specified at no load operation. Therefore this value has to be approx. 5 % higher than the rated voltage of the drive.

In case of 12-pulse supply the radio frequency interference filters, which are built into the >*pDRIVE*< *MX pro* as standard, must be reconnected onto setting "IT mains".

Mains impedance / Short-circuit current

The >*pDRIVE*< *MX pro* frequency inverters are designed considering a maximal permitted mains short-circuit current of the supply (values see technical data of the respective frequency inverter).

By means of using chokes (option >*pDRIVE*< *DCL* or option >*pDRIVE*< *NDU*) considerably higher mains short-circuit powers are possible without any effect to the operating safety of the inverter.

Power factor correction systems

Frequency inverters cause current harmonics in the supplying mains. If a power factor correction system is used, their capacitors are additionally stressed by means of the harmonics.

To protect against overload, we recommend the installation of chokes for those parts.

Switching rate

The >*pDRIVE*< *MX pro* inverters can be directly switched on and off by means of the line contactor which can be easy controlled via a relay output of the inverters.

In case of frequent start/stop commands it is recommended to realize them by means of the digital control inputs (or via a serial bus) directly to the electronics of the inverter.

By means of the certificated control input "PWR" a "Safe Standstill" of the drive is guaranteed considering the safety category according to EN 954-1 / ISO 13849-1 (and IEC/EN 61800-5-2). Thus a line or motor contactor can be saved.

Further information is given in the function "safe standstill".

Inverter control	Switching rate
The inverter is controlled by means of connecting and disconnecting the mains voltage.	max. 60 switching operations per hour (safety category 1, stop category 0)
Disconnection of the motor by means of a motor contactor	depending on the motor contactor (safety category 1, stop category 0)
Electronic start/stop commands by means of the digital inputs of the inverter	arbitrary
Electronic lock of the inverter by means of the control input PWR "Safe Standstill"	arbitrary (safety category 3, stop category 0 or 1)

The device fans are automatically controlled depending on the start command and a temperature-sensitive delay of stop (see function "Fan control", parameter B3.41).

HMHF

8 P01 325 EN.04/04

Protection of the plant

Responsibility

The users are responsible to integrate the frequency inverters into the protection and safety concept of the plant or machine.

All stated connection recommendations and planning remarks are to be taken merely as suggestions which must be adapted to the local conditions and regulations concerning installation and usage.

This applies especially to the safety regulations for machines, the EMC regulations and the general regulations for human protection.

Frequencies > 60 Hz

For operating the motors and drives with frequencies higher than 60 Hz check all used components if they are also qualified.

You should ask the manufacturer of the motor and the machine on principle. Typically, 4- to 8-pole motors are qualified for operation up to 100 Hz.

Overvoltage protective circuit

All inductivities like relays, contactors, magnetic brakes, etc. have to be equipped with an overvoltage protective circuit. That prevents malfunctions of the conventional device control as well as of the fieldbus.

A free-wheel diode has to be provided for DC control circuits.

For AC control circuits a R/C circuit is favored over a circuit with varistors because with the R/C circuit not only the peak overvoltage is reduced but also the rise-time.

The protective circuit must be qualified for inverter operation !

Automatic restart

The internal function "automatic restart" switches the inverter automatically on after each mains switch-on or mains recurrence without the power failure having to be confirmed. This is an important and valuable function for the increase in availability, especially for drives which are not integrated into the plant control via a fieldbus system.

The automatic restart takes place in case of:

- Switch-on of the mains voltage (only in case of 2-wire control and dependent on the selected undervoltage behaviour)
- after a mains failure (only in case of 2-wire control and dependent on the selected undervoltage behaviour)
- completion of the standby-mode
- after each trip confirmation (only in case of 2-wire control – level rated)
- after a fast stop or emergency stop (only in case of 2-wire control – level rated)

Earth leakage circuit breaker

Frequency inverters, especially those with additional radio frequency interference filters and screened motor cables, lead an increased leakage current against earth.

The leakage current depends on:

- the length of the motor cable
- the type of laying and whether the motor cable is screened or not
- the set pulse frequency
- the use of an additional radio frequency interference filter
- the grounding of the motor at his installation place (grounded or nongrounded)

Particularly because of the capacitors of the filter, an unintentional triggering of an earth leakage circuit breaker may occur at the moment of switching on. As well, the earth capacitances may cause an incorrect triggering during operation.

On the other hand, it is possible that the triggering is blocked by means of DC components which are caused by the mains rectification at the input of the inverter.

Therefrom, you should observe following:

- Only use short-time delayed and pulse current sensitive earth leakage circuit breakers with considerably higher tripping current.
- Protect the other loads by means of a separate earth leakage circuit breaker.
- Earth leakage circuit breakers in front of an inverter do not provide absolutely reliable protection in case of direct contact !! So they should be always used in combination with other protective measures.
- The frequency inverters have no current-limiting effect (in case of earth leakage currents) and therefore they do not violate the protective multiple earthing.

Depending on the conditions, the leakage current of plants with high cable lengths can be absolutely higher than 100 mA !!

The built-in earth leakage detection has no current-limiting effect. It only protects the drive and is no human protection.

Locking of the frequency inverter

The *>pDRIVE< MX pro* devices include the standard protective function "Safe Standstill" (Power Removal, certificate no. 72148-2 /2006), which prevents any unintended start-up of the motor. This function fulfills, when correctly wired, the machine standard EN 954-1 / ISO 13849-1 safety category 3, the IEC/EN 61508 SIL2 standard for functional safety and the power drive system standard IEC/EN 61800-5-2.

Further information about this protective function is given in the catalogue, chapter "Safe Standstill".

HMHF
8 P01 325 EN.04/04

Connecting and disconnecting the motor

Alternatively to the use of the control terminal PWR "Safe Standstill" a safety switch or a motor contactor can be installed to connect and disconnect the motor. Because the inverter recognizes the respective switching state, there is no risk of demolition or fault switch-off.

After connection the motor restarts by means of the function "Catch on the fly".

Further information is given in the Description of functions, parameter C6.08 "Motor contactor control".

Operation of ATEX motors in explosive atmospheres

The variable speed drives >*pDRIVE*< *MX eco* and >*pDRIVE*< *MX pro* integrate the "Power Removal" safety function which prohibits unintended equipment operation. The motor no longer produces torque. The use of the "Power Removal" safety function allows the drive to be installed as a part of the safety-related electrical, electronic and programmable electronic control systems, dedicated to the safety of a machine or an industrial process. This safety function complies with the standard for safety of machinery EN 954-1 / ISO 13849-1, category 3. It complies also with the standard for functional safety IEC/EN 61508 and with the power drive systems product standard IEC/EN 61800-5-2, SIL2 capability.

The use of the "Power Removal" safety function also allows the >*pDRIVE*< *MX eco* and >*pDRIVE*< *MX* pro variable speed drives to control and command motors installed in explosive atmospheres (ATEX).

HMHF

More information about the operation of the frequency inverter in combination with ATEX-motors can be found in the "ATEX Installation guide" 8 P01 036.

Insulation measurements

8 P01 325 EN.04/04

All frequency inverters are tested regarding voltage resistance and insulation resistance according to EN 61800-5-1. When measuring the insulation resistance for this devices (e.g. in case of inspection) unconditionally pay attention to following points:

1. Short-circuit all power terminals of the inverter (L1, L2, L3, U, V, W, PO, PA/+, PB, PC/-).
2. Disconnect the internal RFI-filter, i.e. the screw on the RFI-board has to be removed (position of the screw see chapter "Nongrounded mains", page 13).
3. Carry out the measurements of the insulation resistance only between the short-circuited power terminals and ground.
4. Test voltage: *MX eco* 4V & *MX pro* 4V: max. 2.8 kV DC
   MX pro 6V: max. 3.11 kV DC
5. Before measuring the insulation resistance of the motor, the motor has to be safely separated from the inverter either by disconnection or by opening the motor contactor. Non-observance leads to damage of the inverter !

Use a checking device which is qualified for tests with high capacities and leakage currents up to 10 mA.

Do not carry out insulation resistance measurements at the control terminals !!!

8 P01 325 EN.04/04 HMHF

Specification of the inverter

Technical data

The frequency inverters *>pDRIVE< MX pro* 4V from type 4V90/110 as well as the devices of the *>pDRIVE< MX pro* 6V range are equipped with a dual rating function.

So the frequency inverter can be used either:

- with a high dynamic overload capability and nominal continuous power (setting "0 .. Power P1") or
- with high continuous load at a simultaneously reduced dynamic overload capacity (setting of "1 .. Power P2").

The difference between the maximum permissible continuous output power of both settings is one step of IEC motor list.

Example

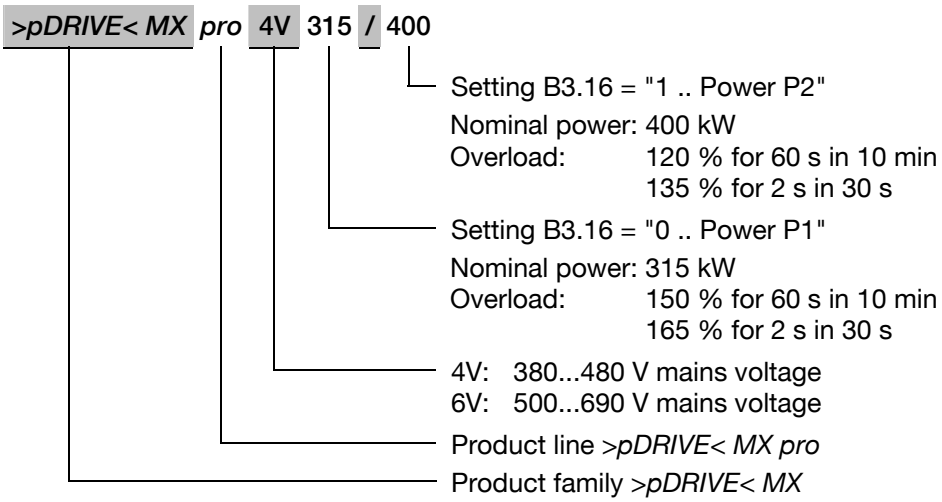

HMHF
8 P01 325 EN.04/04

Input	
Voltage	380 V -15% up to 480 V +10% for TT, TN or IT mains *)
Frequency	50 / 60 Hz ±5 % *)
Overvoltage class	Class III according to EN EN 61800-5-1
Power factor	Fundamental (displacement factor): > 0.98 Total (λ) at full load: 0.93...0.95 (with AC or DC choke) Total (λ) at no load: approx. 0.7 (with AC or DC choke)
Output	
Control method	Sensorless Vector Control, Vector Control with speed feedback, V/f-characteristic, Synchronous motor without encoder, Synchronous motor with encoder (>*pDRIVE*< *MX pro* 4V...-SY devices with own order code for applications with high starting torque)
Voltage	3 AC 0...100% mains voltage, dynamic voltage stabilization
Overload	Power 1: 50 % for 60 s per 10 minutes, 65 % for 2 seconds Power 2: 20 % for 60 s or 35 % for 2 s (from 110 kW)
Pulse frequency	*MX pro 4V0,75...4V75:* 4 kHz, adjustable from 2...16 kHz *MX pro 4V90/110...4V500/630:* 2.5 kHz, adjustable from 2...8 kHz
Frequency / Base frequency	0...300 Hz / 25...300 Hz, adjustable
Short circuit protection	All-pole protected against short circuit and earth fault by means of overcurrent switch-off
Design	Built-in unit for vertical mounting
Cooling	forced
Frequency resolution, digital	0.01 Hz / 50 Hz, frequency stability: ±0.01 % / 50 Hz
Speed accuracy	V/f mode: Slip frequency VC without feedback: 0.3 x slip frequency VC with feedback: 0.01% of maximum frequency (parameter C2.02)
Torque accuracy	5% at VC (3 … 300 Hz)
Torque response time	Depending on the setting of the speed controller up to 2 ms
Mechanical strength	
Mechanical vibration	According to IEC/EN 60068-2-6 *MX pro 4V0,75...4V75:* 1.5 mm at 3...13 Hz, 1 g at 13...200 Hz (3M3 according to IEC/EN 60721-3-3) *MX pro 4V90/110...4V500/630:* 1.5 mm at 3...10 Hz, 0.6 g at 10...200 Hz (3M3 according to IEC/EN 60721-3-3)
Shock	According to IEC/EN 60068-2-27 *MX pro 4V0,75...4V75:* 15 g for 11 ms (3M3 according to IEC/EN 60721-3-3) *MX pro 4V90/110...4V132/160:* 7 g for 11 ms (3M3 according to IEC/EN 60721-3-3) *MX pro 4V160/200...4V500/630:* 4 g for 11 ms (3M2 according to IEC/EN 60721-3-3)

*) Technical data and remarks for mains voltages are given in chapter "Mains conditions", page 12.

Ambient conditions		
Operating temperature	in case of dimensioning for high overload (Power 1): in case of increased output power (Power 2, from 4V90/110): (3K3 according to IEC/EN 60721-3-3) up to +60°C with derating	-10...+50°C -10...+45°C
Storage / Transport temperature	-25...+70°C	
Protection degree	*>pDRIVE< MX pro 4V0,75...4V75:* *>pDRIVE< MX pro 4V90/110...4V500/630:*	bottom, sideways, front IP21 top IP41 (IP20 without protective cover) sideways, front IP31 top IP20 (IP31 with DC box) bottom IP00 (IP31 with terminal box)
Environmental class / Humidity	Class 3K3 in accordance with IEC/EN 60721-3-3 / no condensation, max. 95 % relative humidity	
Altitude	Up to 1000 m, beyond power decrease of 1 % per 100 m up to 3000 m	
Allowed pollution	Pollution degree 2 according to EN 61800-5-1 *>pDRIVE< MX pro 4V0,75...4V75:* *>pDRIVE< MX pro 4V90/110...4V500/630:*	 3C1 and 3S2 according to EN 60721-3-3 3C2 and 3S2 according to EN 60721-3-3
Protection class	Class 1 according to EN 61800-5-1	
Safety functions and ATEX – applications		
Safety of the drive	The safety function "safe standstill" (Power Removal) allows a controlled shut-down as well as switch-off of the power supply when standstill. It also prevents any unintended start of the motor according to EN 954-1 / ISO 13849-1, category 3 and IEC/EN 61800-5-2.	
Protection of the machine	The safety function "safe standstill" (Power Removal) allows a controlled shut-down as well as switch-off of the power supply when standstill. It also prevents any unintended start of the motor according to IEC/EN 61508, SIL2 capability and IEC/EN 61800-5-2.	
Safety of the ATEX motor	The thermal sensor of the ATEX motor is integrated to the safety function "safe standstill" (PWR input) of the inverter by a safety switching device.	
Response time	≤ 100 ms in STO (Safe Torque Off)	
Standards		
Basic standard	The devices are designed, built and tested on the basis of EN 61800-5-1.	
EMC immunity	According to EN 61800-3, 1st and 2nd environment (IEC 1000-4-2; IEC 1000-4-3; IEC 1000-4-4; IEC 1000-4-5; IEC 1000-4-6)	
EMC emission	in accordance with product standard EN 61800-3, 1st and 2nd environment, category C1, C2, C3	
Insulation	Galvanic insulation from the control electronics in accordance with EN 61800-5-1 PELV (Protective Extra Low Voltage)	
Approvals	CE, UL, CSA, GOST, ATEX	

Frequency inverters are a product of the restricted sales according to IEC 61800-3. In a residential environment this product can cause radio frequency interferences whereupon the user can be called on to take suitable measures.

Wiring and connection

Wiring diagram

The following diagrams show the typical wiring of the frequency inverters including the options which may be required for protection of the plant or the device, depending on the application.

Description of the used abbreviations:

>*pDRIVE< MX* ..... Frequency inverter
HS ..... Main switch (to be used if required according to the local regulations)
NH ..... Mains fuses considering table "Fuses and cable cross sections" (absolutely necessary)
NS ..... Mains contactor (to be used if required according to the local regulations)
TS ..... Disconnecting switch (to be used according to the local regulations)
TR ..... Transformer with two out-of-phase secondary windings (e.g. Yy6 d5)
HF ..... Mains current harmonic filter to reduce the current harmonics on the mains caused by the DC link
NDU ..... Line reactor to reduce the mains current harmonics caused by the DC link
RFI ..... Radio frequency interference filter to use the inverter considering category C1 or C2 according to EN 61800-3 "Use in 1st environment - residential environment"
internal filter ..... Radio frequency interference filter to reduce the mains disturbances considering category C3 according to EN 61800-3 "Use in industrial environments" (category C2 up to >*pDRIVE< MX eco & pro* 4V4,0)
DCL ..... DC choke to reduce the mains current harmonics
AMF ..... Output motor filter to reduce the voltage peaks at the motor in case of long motor cables
SMF ..... Sinus motor filter for a nearly sinusoidal motor current and a total prevention of additional noises at the motor
BU ..... Braking unit
BR ..... Braking resistor for short deceleration time or short-time dynamic loads
DC+ / DC- ..... Power supply from a DC-bar; alternatively to 3AC mains supply.

1. The inverter supply must be split up in front of the line reactors, if they are used.
2. The monitoring of the fuses is used to protect the inverter against unbalanced load. It must act on mains contactor or pulse inhibit (e.g. digital input "External fault"). This is not obligatory, because the inverter monitors the mains voltage. Therefor set the parameter E3.27 "Mains phase monitoring" to "1..Active" (factory default).
3. In case of supply by means of a three-winding-transformer the neutral point can be grounded or alternatively an insulation monitoring relay can be used.
4. The transformer must keep to the following tolerances in order to guarantee a constant current sharing:
   Tolerance of the secondary voltages to each other: 0.3 % of V_{NOM}
   Tolerance of the relative short circuit voltage: ± 5.0 % of v_{SC_NOM}
   The nominal output voltage of a transformer is specified at no load operation. Therefore this value has to be appr. 5 % higher than the rated voltage of the drive.

HMHF
8 P01 325 EN.04/04

>pDRIVE< MX pro 4V0,75...4V132/160

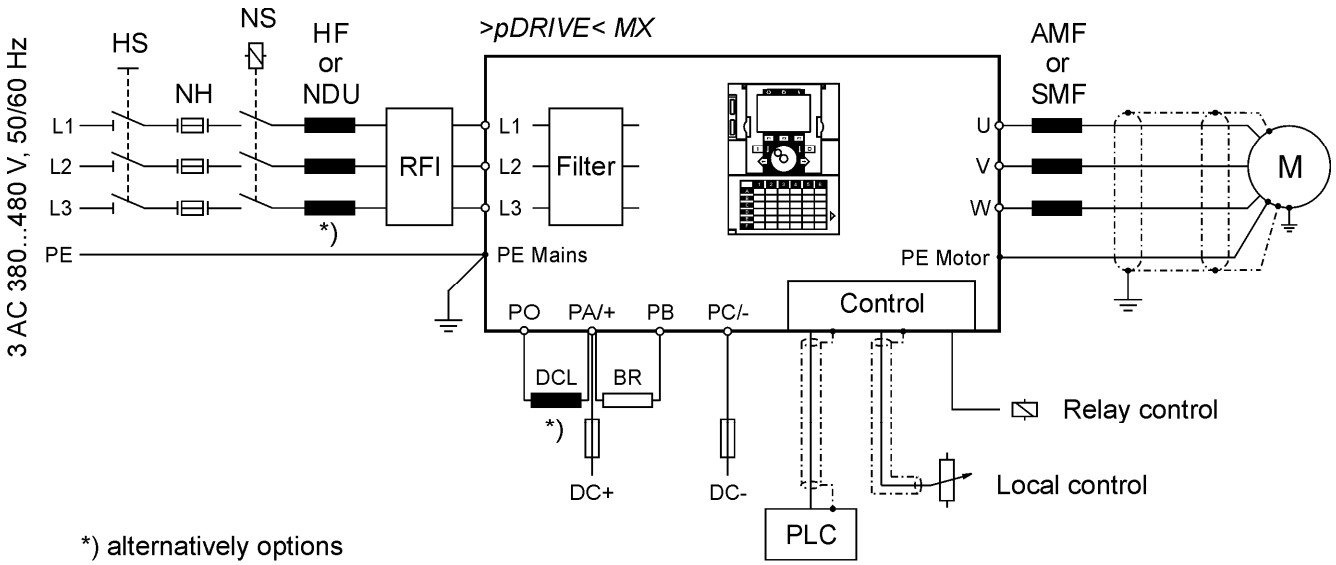

*) alternatively options

>pDRIVE< MX pro 4V160/200

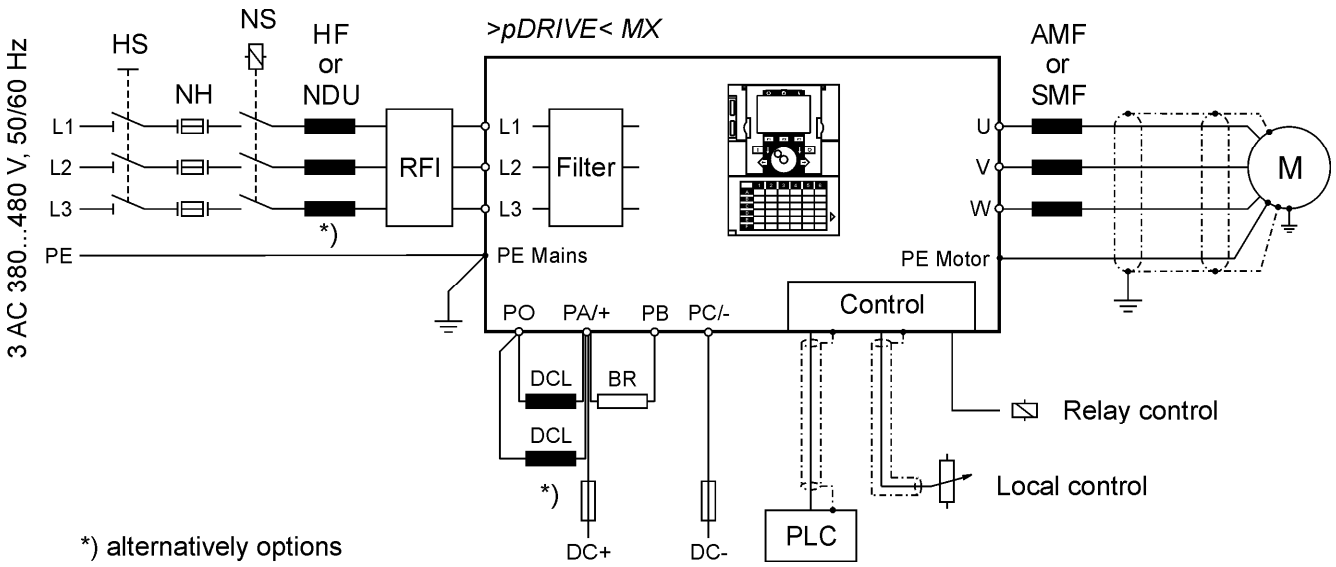

*) alternatively options

Frequency inverters are a product of the restricted sales according to IEC 61800-3. In a residential environment this product can cause radio frequency interferences whereupon the user can be called on to take suitable measures.

>pDRIVE< MX pro 4V200/250 … 4V250/315

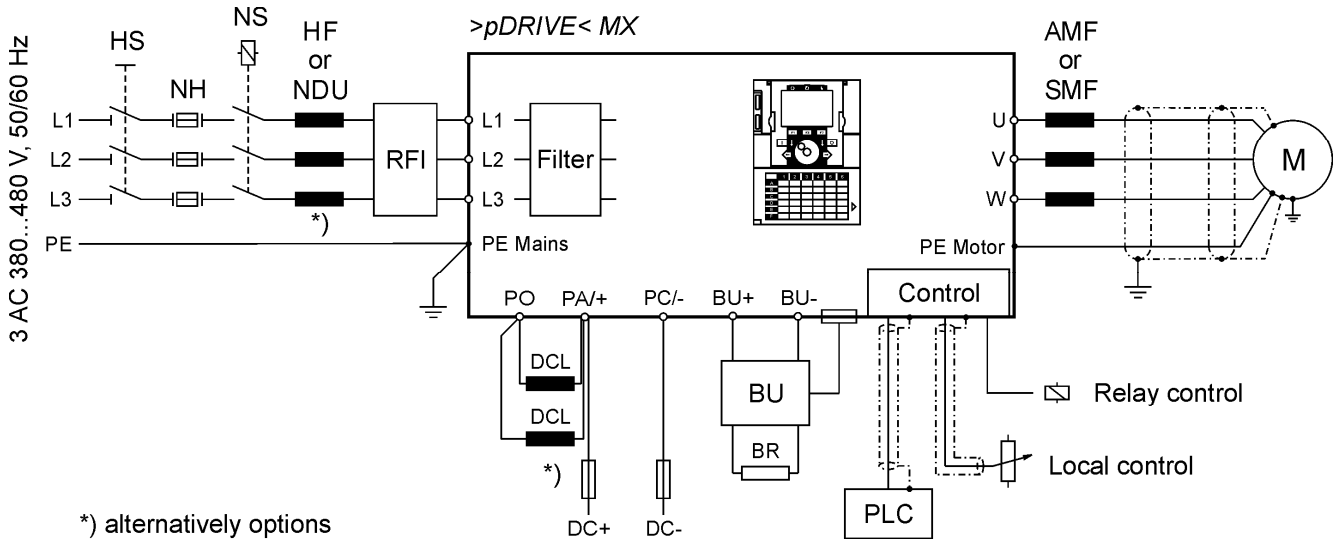

>pDRIVE< MX pro 4V315/400

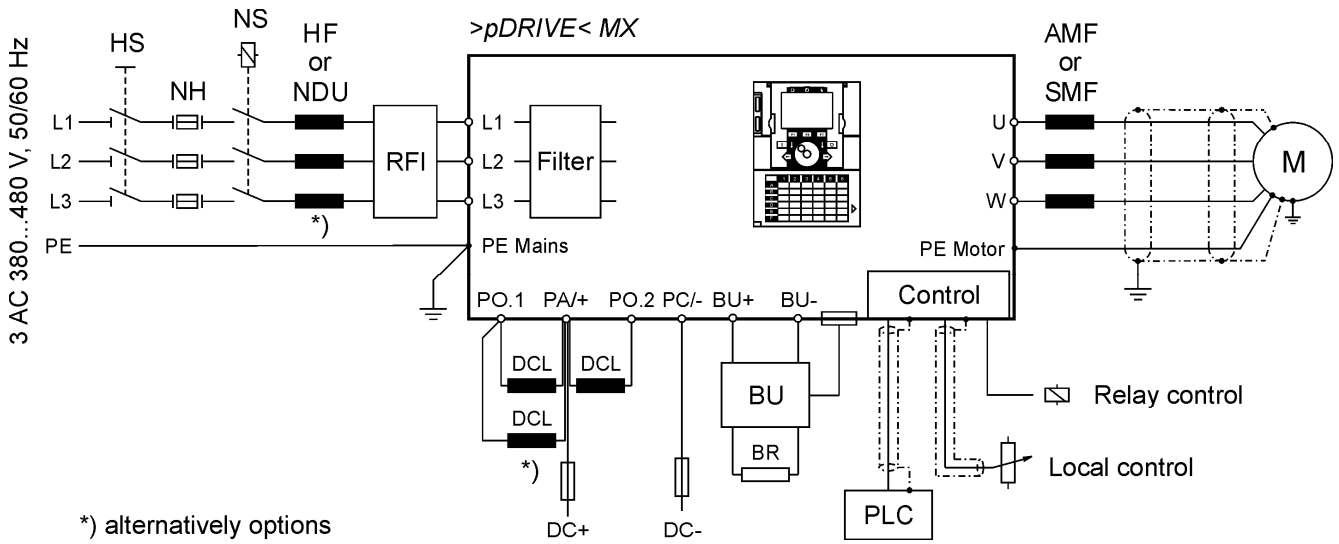

HMHF
8 P01 325 EN.04/04

Frequency inverters are a product of the restricted sales according to IEC 61800-3. In a residential environment this product can cause radio frequency interferences whereupon the user can be called on to take suitable measures.

>pDRIVE< MX pro 4V400/500...4V500/630

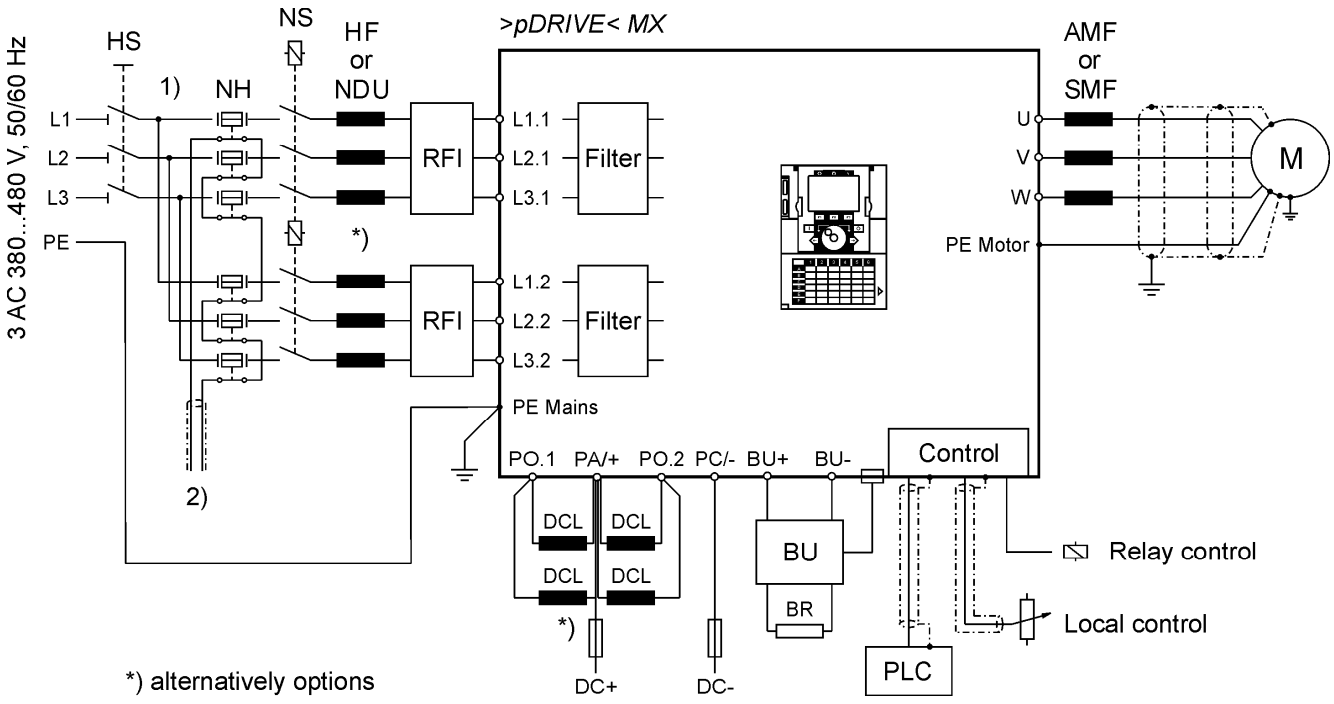

HMHF

>pDRIVE< MX pro 4V400/500...4V500/630

12-pulse rectification

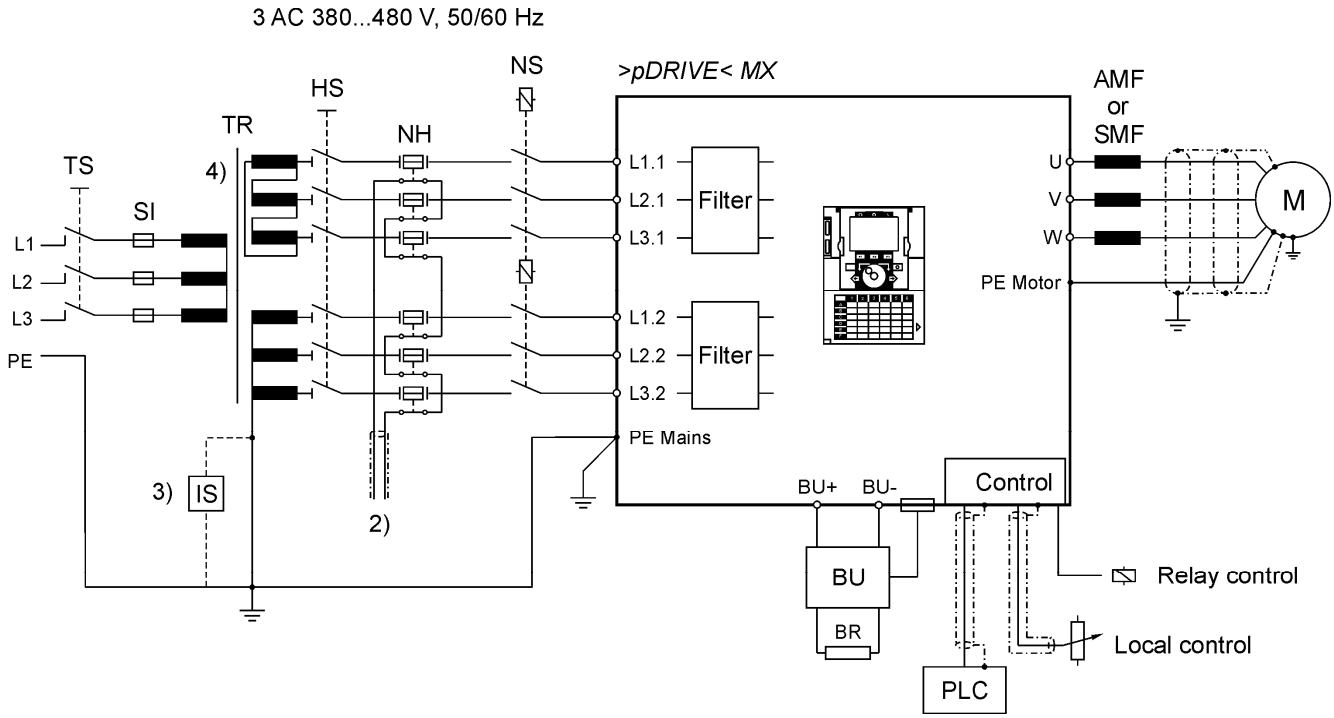

8 P01 325 EN.04/04

Frequency inverters are a product of the restricted sales according to IEC 61800-3. In a residential environment this product can cause radio frequency interferences whereupon the user can be called on to take suitable measures.

Fuses and cable cross sections

The >*pDRIVE*< *MX pro* frequency inverters do not include any input fuses. They have to be provided externally for the case that the electronic protective mechanism of the inverters fails. Thus they are a secondary protection of the inverter to protect the power cables against overload and to protect the input rectifier in case of an internal short-circuit.

The below-mentioned diameters for 3-wire cables are recommended values for laying the cable in air at max. 40°C ambient temperature, based on the regulations ÖVN EN 1 and VDE 0100.

The lines in the cubicles are dimensioned according to the specification for single conductors XLPE/EPR copper 90°C.

The motor cables are dimensioned for the maximum continuous current. They apply to 0...100 Hz (up to 300 Hz the cable losses increase about 25 % because of the Skin-effect).

In case of other ambient conditions and different regulations the cable diameters must be adjusted.

Mains supply				Frequency inverter			Motor output
Pre- or conduit fuses [1.]	Cu cable mm^2	Mains fuse "inverter protection" "sf"	Lines in the cubicle mm^2 (per phase)	>*pDRIVE*< *MX pro*	Max. cont. current	Max. connec-tion	Motor cable mm^2 [3.]
10 A	3 x 1.5	10 A (sf)	1.5	4V0,75	2.3 A	6 mm^2	3 x 1.5
10 A	3 x 1.5	10 A (sf)	1.5	4V1,5	4.1 A	6 mm^2	3 x 1.5
10 [16] A	3 x 1.5 [2.5]	10 [16] A (sf)	1.5 [2.5]	4V2,2	5.8 A	6 mm^2	3 x 1.5
16 [20] A	3 x 2.5	16 [20] A (sf)	2.5	4V3,0	7.8 A	6 mm^2	3 x 1.5
20 [25] A	3 x 2.5 [4]	16 [25] A (sf)	2.5 [4]	4V4,0	10.5 A	6 mm^2	3 x 1.5
25 [40] A	3 x 4 [6]	25 [40] A (sf)	4 [6]	4V5,5	14.3 A	6 mm^2	3 x 2.5
32 [40] A	3 x 4 [6]	25 [40] A (sf)	4 [6]	4V7,5	17.6 A	6 mm^2	3 x 2.5
40 [63] A	3 x 6 [16]	40 [63] A (sf)	6 [10]	4V11	27.7 A	16 mm^2	3 x 4
63 [80] A	3 x 16 [25]	50 [80] A (sf)	10 [16]	4V15	33 A	35 mm^2	3 x 6
63 [80] A	3 x 16 [25]	50 [80] A (sf)	10 [16]	4V18	41 A	35 mm^2	3 x 10
63 [80] A	3 x 16 [25]	63 [80] A sf A	10 [16]	4V22	48 A	50 mm^2	3 x 10
80 [100] A	3 x 25 [35]	80 [100] A sf A	16 [25]	4V30	66 A	50 mm^2	3 x 16
100 [125] A	3 x 35 [50]	100 [125] A sf A	25 [35]	4V37	79 A	50 mm^2	3 x 25
125 [160] A	3 x 50 [70]	125 [160] A sf B	35 [50]	4V45	94 A	120 mm^2	3 x 35
160 [200] A	3 x 70 [95]	160 [200] A sf B	50 [70]	4V55	116 A	120 mm^2	3 x 50
200 [250] A	3 x 95 [120]	200 [250] A sf B	70 [95]	4V75	160 A	120 mm^2	3 x 70
Power 1 – high overload							
250 A	3 x 120	250 A sf C	95	4V**90**/110	179 A	M10	3 x 95
315 A	3 x 185	315 A sf C	120	4V**110**/132	215 A	M10	3 x 120
400 A	2 x (3 x 120)	350 A sf D	150	4V**132**/160	259 A	M10	3 x 150
400 A	2 x (3 x 120)	400 A sf D	185	4V**160**/200	314 A	M12	2 x (3 x 95)
500 A	2 x (3 x 150)	500 A sf E	2 x 120	4V**200**/250	387 A	M12	2 x (3 x 120)
630 A	2 x (3 x 185)	630 A sf F	2 x 150	4V**250**/315	481 A	M12	2 x (3 x 150)
800 A	3 x (3 x 185)	800 A sf F	3 x 150	4V**315**/400	616 A	M12	3 x (3 x 150)
1000 A	4 x (3 x 185)	2 x 500 A sf [2.] E	2 x 2 x 120	4V**400**/500	759 A	M12	3 x (3 x 185)
1250 A	4 x (3 x 240)	2 x 630 A sf [2.] F	2 x 2 x 150	4V**500**/630	941 A	M12	4 x (3 x 185)

HMHF
8 P01 325 EN.04/04

Mains supply				Frequency inverter			Motor output
Pre- or conduit fuses [1.]	Cu cable mm^2	Mains fuse "inverter protection" "sf"	Lines in the cubicle mm^2 (per phase)	>*pDRIVE*< *MX pro*	Max. cont. current	Max. connec-tion	Motor cable mm^2 [3.]
Power 2 – high continuous load							
250 A	3 x 120	250 A sf C	95	4V90/**110**	215 A	M10	3 x 120
315 A	3 x 185	315 A sf C	120	4V110/**132**	259 A	M10	3 x 150
400 A	2 x (3 x 120)	400 A sf D	185	4V132/**160**	314 A	M10	2 x (3 x 95)
500 A	2 x (3 x 150)	500 A sf D	2 x 120	4V160/**200**	387 A	M12	2 x (3 x 120)
630 A	2 x (3 x 185)	630 A sf E	2 x 150	4V200/**250**	481 A	M12	2 x (3 x 150)
800 A	3 x (3 x 185)	800 A sf F	3 x 150	4V250/**315**	616 A	M12	3 x (3 x 150)
1000 A	4 x (3 x 185)	900 A sf F	3 x 185	4V315/**400**	759 A	M12	3 x (3 x 185)
1250 A	4 x (3 x 240)	2 x 630 A sf [2.] E	2 x 2 x 150	4V400/**500**	941 A	M12	4 x (3 x 185)
1600 A	6 x (3 x 240)	2 x 800 A sf [2.] F	2 x 3 x 150	4V500/**630**	1188 A	M12	5 x (3 x 185)

[1.] Recommended pre-fuses suitable for DOL starting with bypass circuit.

[2.] 2 x 3-pole fuses because of parallel supply

[3.] In case of bypass operation the motor cable has to be dimensioned according to the pre- or conduit fuses !

[ ] If the inverters are used without the option >*pDRIVE*< *DCL*, >*pDRIVE*< *NDU* or >*pDRIVE*< *HF* consider the values in brackets.

It is recommended to use super fast (semiconductor) fuses. Standard fast fuses or circuit breakers can also be used but the rectifier could be damaged in case of an internal fault.

To protect the rectifier in case of a short-circuit the used fuses should not exceed the following I^2t values (referring to 10 ms):

A	B	C	D	E	F
5.10^3 A^2s	50.10^3 A^2s	160.10^3 A^2s	320.10^3 A^2s	780.10^3 A^2s	1000.10^3 A^2s

If the mains fuses blow the inverter already has a primary defect. Therefore, exchanging the blown fuses and switching the inverter on again is not effective. Consequently, the use of circuit breakers is not advantageous and has additionally the disadvantage of a slower switch-off ad. A circuit breaker with motor drive has to be seen in fact as an alternative to the line contactor.

A low cost alternative to screened motor cables is the use of NYCY or NYCWY cables (power cables with concentric protective conductor).

In order to meet the requirements of UL/CSA, copper cables with temperature class 60/75°C have to be used.

In addition to semiconductor fuses (with UL approval, nominal values in accordance with column Mains fuse "inverter protection" "sf") the use of class CC, class J and class T fuses according to the table below is permitted.
The below-mentioned cable cross sections correspond with the temperature class 75°C and an ambient temperature of 30°C.

>pDRIVE<	UL fuses 600V type Fast acting	Max. mains short-circuit current at 480V mains voltage according to UL listing			Cable cross section for mains- and motor cables (per phase)
		without choke	with DCL-choke	with line reactor	
MX pro 4V0,75	Class CC 6 A max.	5 kA	35 kA	100 kA	AWG 14
MX pro 4V1,5	Class CC 12 A max.	5 kA	35 kA	100 kA	AWG 14
MX pro 4V2.2	Class J 15 A max.	5 kA	35 kA	100 kA	AWG 14
MX pro 4V3,0	Class J 17.5 A max.	5 kA	35 kA	100 kA	AWG 14
MX pro 4V4,0	Class J 25 A max.	5 kA	35 kA	100 kA	AWG 12
MX pro 4V5,5	Class J 40A max.	5 kA	35 kA	100 kA	AWG 10
MX pro 4V7,5	Class J 40 A max.	5 kA	35 kA	100 kA	AWG 10
MX pro 4V11	Class J 60 A max.	5 kA	35 kA	100 kA	AWG 8
MX pro 4V15	Class J 70 A max.	5 kA	35 kA	100 kA	AWG 6
MX pro 4V18	Class J 70 A max.	5 kA	35 kA	100 kA	AWG 6
MX pro 4V22	Class J 80 A max.	5 kA	35 kA	100 kA	AWG 6
MX pro 4V30	Class J 90 A max.	5 kA	35 kA	100 kA	AWG 4
MX pro 4V37	Class J 110 A max.	5 kA	35 kA	100 kA	AWG 3
MX pro 4V45	Class J 150 A max.	10 kA	35 kA	100 kA	AWG 1
MX pro 4V55	Class J 175 A max.	10 kA	35 kA	100 kA	AWG 1/0
MX pro 4V75	Class J 225 A max.	10 kA	35 kA	100 kA	AWG 3/0
MX pro 4V90/110	Class J 300 A max.	(10 kA)	50 kA	100 kA	2x AWG 2/0
MX pro 4V110/132	Class J 350 A max.	(10 kA)	50 kA	100 kA	2x AWG 4/0
MX pro 4V132/160	Class J 400 A max.	(18 kA)	50 kA	100 kA	2x 250 MCM
MX pro 4V160/200	Class J 450 A max.	(18 kA)	50 kA	100 kA	2x 350 MCM
MX pro 4V200/250	Class J 600 A max.	(18 kA)	50 kA	100 kA	3x 250 MCM
MX pro 4V250/315	Class T 800 A max.	(30 kA)	50 kA	100 kA	3x 350 MCM
MX pro 4V315/400	Semiconductor fuse 900 A max.	(30 kA)	50 kA	100 kA	4x 350 MCM
MX pro 4V400/500	Class J 2x600 A max.	(30 kA)	50 kA	100 kA	Mains: 2x (2x 500 MCM) Motor: 4x 500 MCM
MX pro 4V500/630	Class T 2x800 A max.	(30 kA)	50 kA	100 kA	Mains: 2x (3x 500 MCM) Motor: 5x 500 MCM

( ) Further information about the values in parentheses is given in chapter "DC choke DCL", page 93 and chapter "Line reactor NDU", page 98.

HMHF
8 P01 325 EN.04/04

DC coupling

DC-coupling of several >*pDRIVE*< *MX* with a line contactor

It is advisable to couple the DC links in case of applications which have to perform full motor power on the one hand and which should act also in generator operation due to the energy exchange over the DC link on the other hand (e.g. roller conveyors, conveyer belts,...).

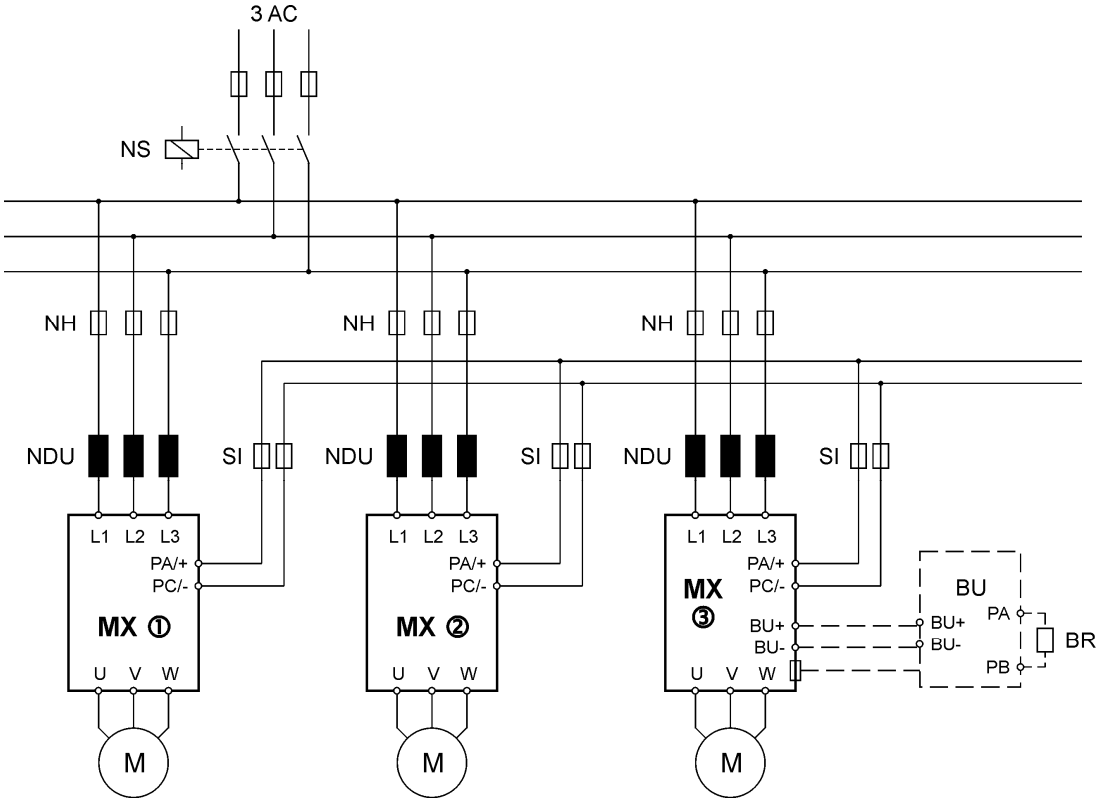

NS ..... Line contactor
Because of the installation of a common line contactor, the charging circuits of the individual inverters act in parallel when the mains is switched on and thus they cannot be overloaded.

NH ..... Device protection on the main side
In order to protect each rectifier against overload, keep the recommended fuses in chapter "Fuses and cable cross sections", page 28. Consequential damages of the charging circuit during mains switch-on can be avoided by using a fuse monitoring which acts on the digital input "Ext. fault 1", "Ext. fault 2" or on the line contactor.

SI ..... Fuse in the DC link according to table in chapter "Fuses for DC-coupled inverters", page 33

①, ②, ③ ..... >*pDRIVE*< *MX eco* and/or *MX pro* frequency inverters in standard design
Basically, the number of devices and their size is arbitrary, but between the biggest and smallest device only three power ratings are possible.

NDU ..... The option line reactor NDU or the DC choke DCL is absolutely necessary !

BU / BR ..... Braking unit and braking resistor for short-time reduction of the generator power
For example, if all drives should be shut down at the same time, the resulting energy will be relieved in the braking resistor.
The use of a braking unit is not obligatory.

>*pDRIVE*< *MX pro* frequency inverters can be operated at the same DC bus. However, some parameters have to be adjusted appropriate (see Description of functions).

>*pDRIVE*< *MX pro* main drive with slave(s) at the DC link

Applications, which include drives which operate as generator (during braking operation) as well as one or several drives which operate as motor, can act very economic in case of a DC supply (e.g. re-/unwinder, straighteners, motor test benches, roller conveyors, hoisting applications,...).

However, at any time there must not be needed more motor power than power which is required for the rectifier of the main drive (e.g. 250 kW + 20 % for 60 s for >*pDRIVE*< *MX pro* 200/250).

DC supplied drives must not be connected during operation !

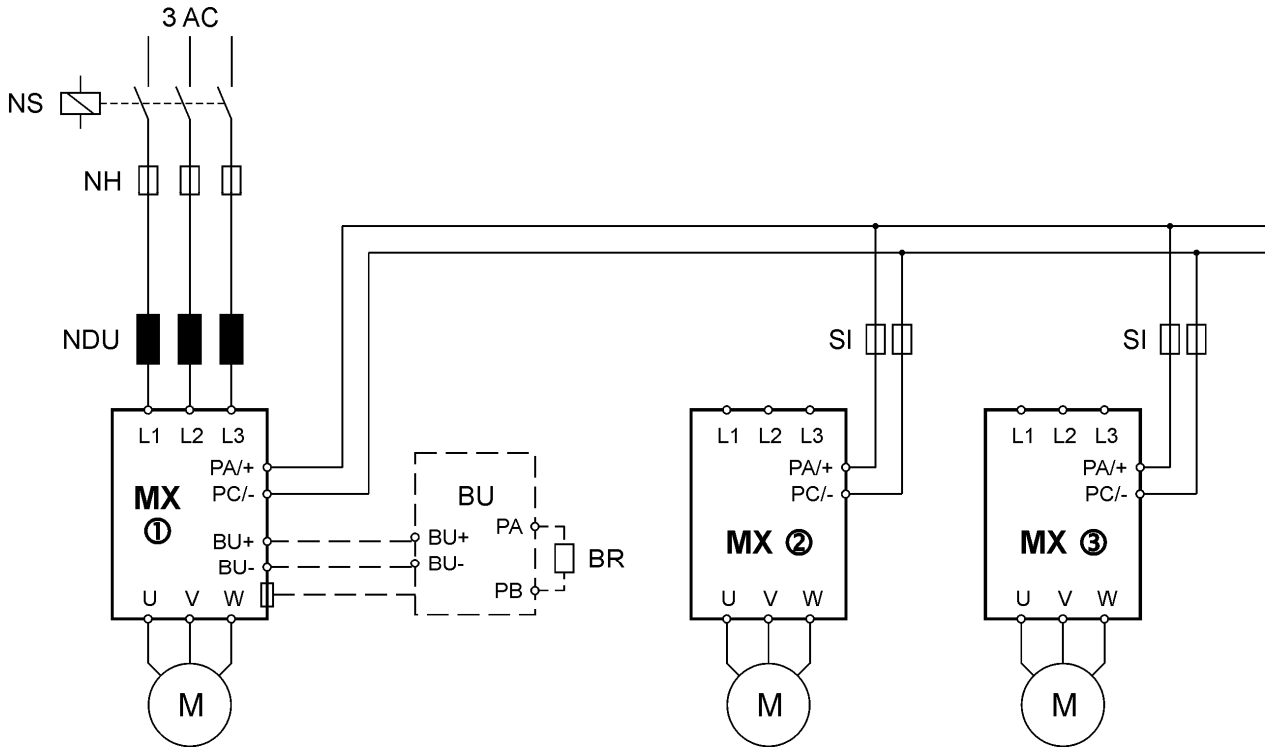

HMHF

8 P01 325 EN.04/04

① .....>*pDRIVE*< *MX pro* frequency inverter in standard design (main drive)
This inverter defines the maximum possible motor power of the whole drive group. It is able to charge three similar devices (or several smaller devices with same total power).

②, ③.....DC supplied inverters >*pDRIVE*< *MX eco a*nd/or *MX pro* (slaves)

NDU .....The option line reactor NDU or the DC choke DCL is absolutely necessary !

SI.....Semiconductor fuse according to the table in chapter "Fuses for DC-coupled inverters", page 33
It does not makes sense to install switching devices in the DC circuit because closing the switching device would lead unintended triggering of the fuses as a result of the high charging current.

BU / BR.....Braking unit and braking resistor for short-time reduction of the generator power
For example, if all drives should be shut down at the same time, the resulting energy will be relieved in the braking resistor.
The use of a braking unit is not obligatory.

At the main drive the braking function has to be activated. The slave(s) have to be parameterized for operation with an external braking unit.

Fuses for DC-coupled inverters

Only semiconductor fuses are suitable for DC applications. Due to their construction they can switch off at DC voltages as well as AC voltages.

DC mains supply	400 V	440 V	460 V
Nominal voltage Voltage range Overvoltage shut-down	560 V DC 405...650 V DC 1.50 x $V_{N\text{-}DC}$	620 V DC 450...685 V DC 1.35 x $V_{N\text{-}DC}$	680 V DC 490...745 V DC 1.25 x $V_{N\text{-}DC}$
Nominal current DC (approx.)	1.15 x I_{MOTOR}	1.15 x I_{MOTOR}	1.15 x I_{MOTOR}
Type of fuse, Nominal voltage	690 V sf	690 V sf	690 V sf

>*pDRIVE*< frequency inverter		Mains fuse "inverter protection" "sf"	Lines in the cubicle (per phase)
MX eco 4V0,75	*MX pro* 4V0,75	16 A	2.5 mm²
MX eco 4V1,5	*MX pro* 4V1,5	16 A	2.5 mm²
MX eco 4V2,2	*MX pro* 4V2,2	16 A	2.5 mm²
MX eco 4V3,0	*MX pro* 4V3,0	16 A	2.5 mm²
MX eco 4V4,0	*MX pro* 4V4,0	20 A	4 mm²
MX eco 4V5,5	*MX pro* 4V5,5	25 A	4 mm²
MX eco 4V7,5	*MX pro* 4V7,5	32 A	6 mm²
MX eco 4V11	*MX pro* 4V11	40 A	6 mm²
MX eco 4V15	*MX pro* 4V15	63 A	10 mm²
MX eco 4V18	*MX pro* 4V18	63 A	10 mm²
MX eco 4V22	*MX pro* 4V22	80 A	16 mm²
MX eco 4V30	*MX pro* 4V30	100 A	25 mm²
MX eco 4V37	*MX pro* 4V37	125 A	35 mm²
MX eco 4V45	*MX pro* 4V45	160 A	50 mm²
MX eco 4V55	*MX pro* 4V55	200 A	70 mm²
MX eco 4V75	*MX pro* 4V75	250 A	95 mm²
MX eco 4V90	–	315 A	120 mm²
MX eco 4V110	*MX pro* 4V90/110	315 A	120 mm²
MX eco 4V132	*MX pro* 4V110/132	400 A	185 mm²
MX eco 4V160	*MX pro* 4V132/160	500 A	2 x 120 mm²
MX eco 4V200	*MX pro* 4V160/200	630 A	2 x 150 mm²
MX eco 4V250	*MX pro* 4V200/250	700 A	3 x 120 mm²
MX eco 4V315	*MX pro* 4V250/315	900 A	3 x 150 mm²
MX eco 4V355	–	1000 A	3 x 185 mm²
MX eco 4V400	*MX pro* 4V315/400	1250 A	4 x 150 mm²
MX eco 4V500	*MX pro* 4V400/500	1400 A	6 x 120 mm²
MX eco 4V630	*MX pro* 4V500/630	1600 A	6 x 150 mm²

HMHF
8 P01 325 EN.04/04

External fan supply

The inverters up to >*pDRIVE*< *MX pro* 4V90/110 contain DC fans, which are supplied by the internal power supply.

>*pDRIVE*< *MX pro* from 4V110/132 contain AC fans for cooling. These fans are supplied by the mains from the inverter as factory default. Alternatively also an external voltage supply is possible (e.g. Inverter supply via DC bus).

Technical data:

Fan voltage: 380 V -10 % … 440 V +10 % / 50 Hz ±5 %
380 V -10 % … 480 V +10 % / 60 Hz ±5 %

Power:

MX pro 4V110/132 … 4V160/200:	550 VA
MX pro 4V200/250 … 4V250/315:	1100 VA
MX pro 4V315/400 … 4V400/500:	1650 VA *)
MX pro 4V500/630:	2200 VA *)
*) BU 4V750	550 VA

If the external fan supply is used, the connectors X1 and X4 of the fan control board have to be exchanged.

Internal supply (delivery state)

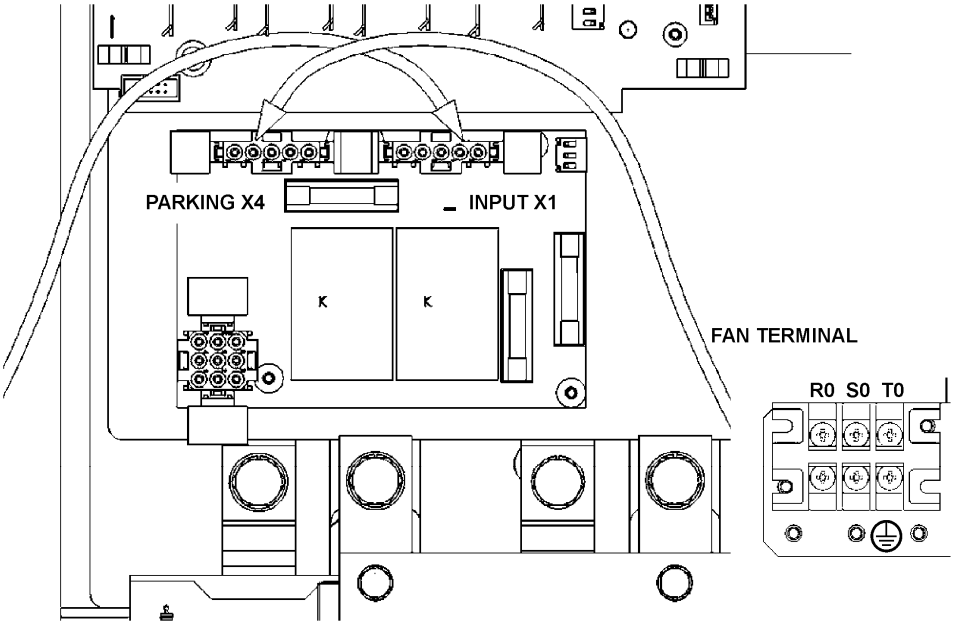

HMHF
8 P01 325 EN.04/04

External supply

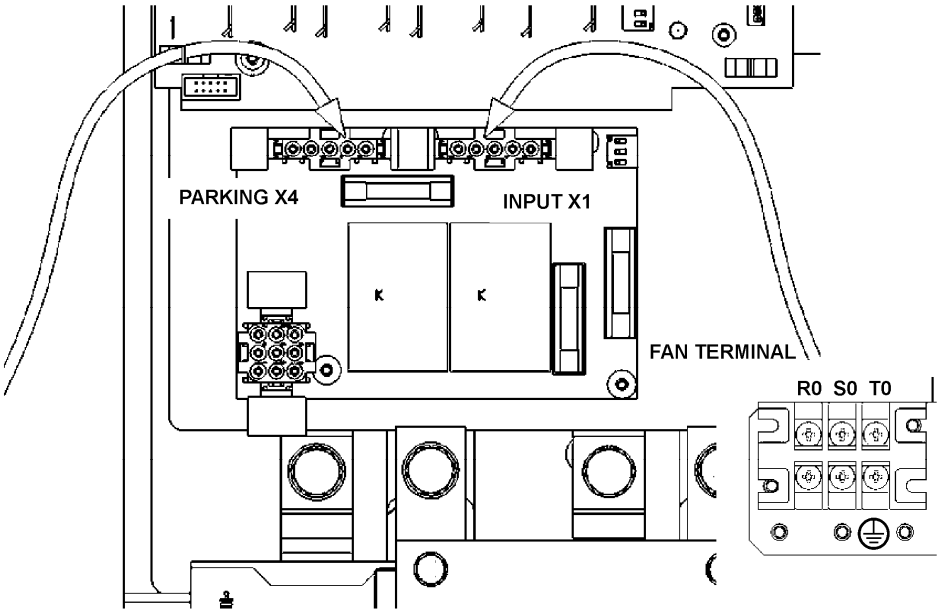

The fans of the power part are switched off during impulse inhibit or low load if parameter B3.41 "Fan control" is set appropriate.

Life cycle of DC-fans: approx. 30.000 hours
Life cycle of AC-fans: approx. 48.000 hours

The ambient condition has an effect on the life cycle of the fans.

Parameters A5.10 "Operating hours fan" and A5.12 "Interval counter fan" show the actual operating time of the AC fans in the display. By means of parameter A5.11 "Interval fan" a maintenance message can be released after reaching a preset operation time.

The fans for the control part start running as soon as the inverter is applied with voltage. Therefore these fans should be replaced precautionary after five years!

Basic notes for connection

1. **Power cables**, especially motor cables, with single wires should be always laid closely bundled with the corresponding PE conductor.

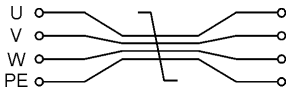

2. **Control**, mains supply and motor output should be arranged separately from each other, if possible.

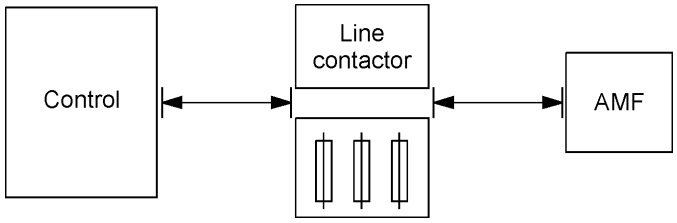

3. **Never lay control cables, mains supply or motor cables in the same cable conduit !!**

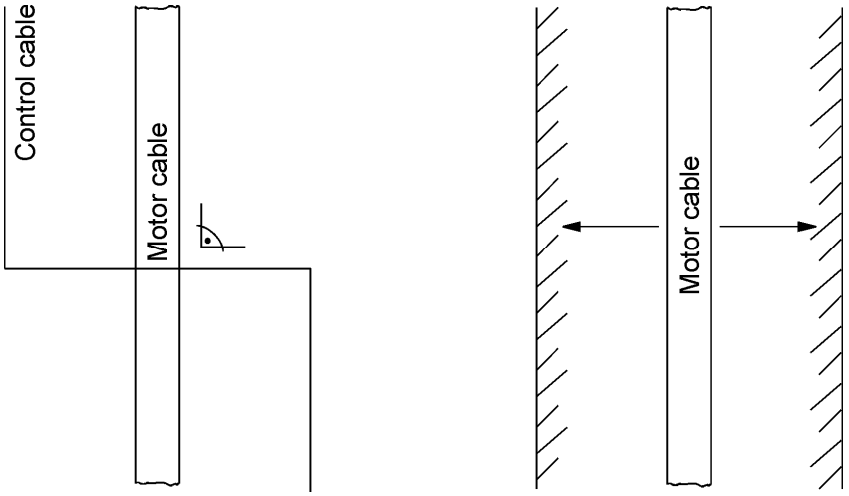

4. **Use only screened control cables** (exception: relay contacts and possibly digital inputs if they are laid completely separated from the power cables). Always ground the screen at both ends (exception: In case of problems with ground loops due to compensation currents which heat the screen, only the signal input side is grounded or a parallel compensation line is used).

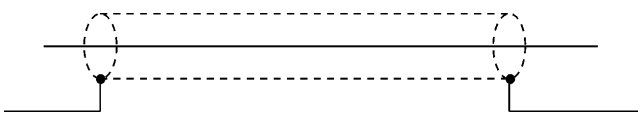

5. Perform **EMC grounding** of the RFI filter, the mounting plate and the cubicle.

   The inductance of "grounding" is extremely significant because the measurement of power failures as well as the existing influences on other loads are related to earth potential. That means that ground connections with large surface, which are arranged parallel to the yellow-green protective grounding PE, are particular important.

6. **Free wires in the motor cable** (e.g. a blue N conductor) must be connected to the PE motor at least on the inverter side. Otherwise they could carry dangerous voltages.

HMHF
8 P01 325 EN.04/04

7. **The motor cable screen** prevents that interference currents drain off via the grounded motor (motor footing). The screen returns them back to the line filter of the inverter.

   Furthermore the motor cable screen reduces the radiated emissions as well as the coupling into neighbouring lines.

   Therefore, screened 4-pole motor cables should be used and the screen should be connected at both ends in accordance with the valid HF rules. The type of screen material (copper or steel) is less important than the well connection at both ends. Alternatively, a closed and well conductive cable conduit can be used which is continuously connected.

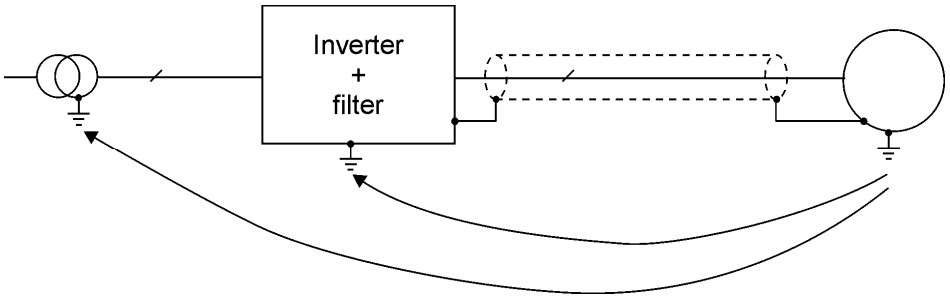

A cheap alternative (for the use in industrial environments) for large cable diameters are power cables with concentric protective conductor (e.g. NYCY or NYCWY). Thereby, the protective conductor assumes the protective function of the PE conductor as well as the screening effect.

Connection of NYCY motor cables:

Because of the dual function of the PE conductor it is necessary to connect the cables on the inverter and motor side proper.

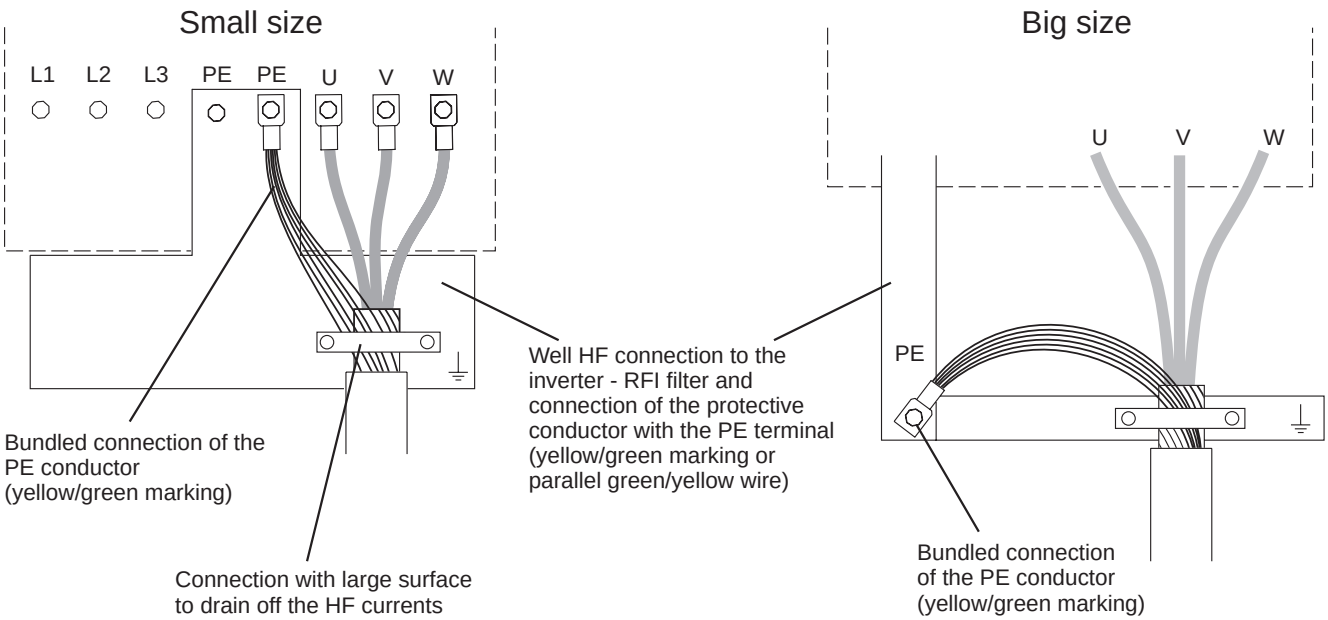

Protective conductor function: bundled clamping of the PE conductor for safe and corrosion-proof connection e.g. by means of a cable lug

Screen function: clamping of the PE conductor with large surface for low HF resistance with well induction of the interference currents to the RFI filter e.g. by means of a clamp

Notes for wiring the power terminals

Access to the power terminals

>*pDRIVE*< *MX pro* 4V0,75...4V18

Unlock the terminal cover of the power part and remove it by pulling as shown in the picture below.

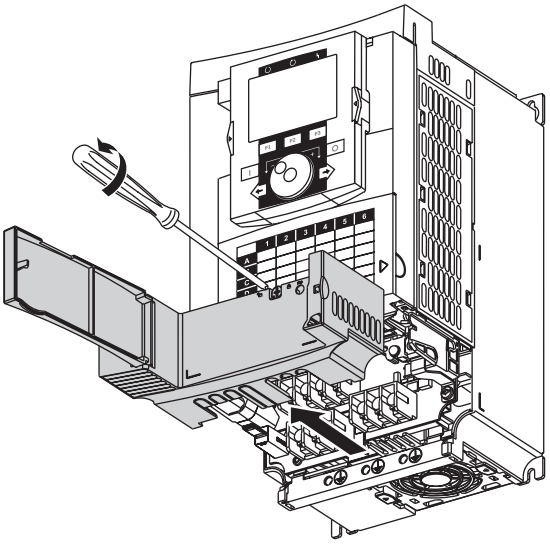

>*pDRIVE*< *MX pro* from 4V22

Remove the front cover to get access to the power terminals.

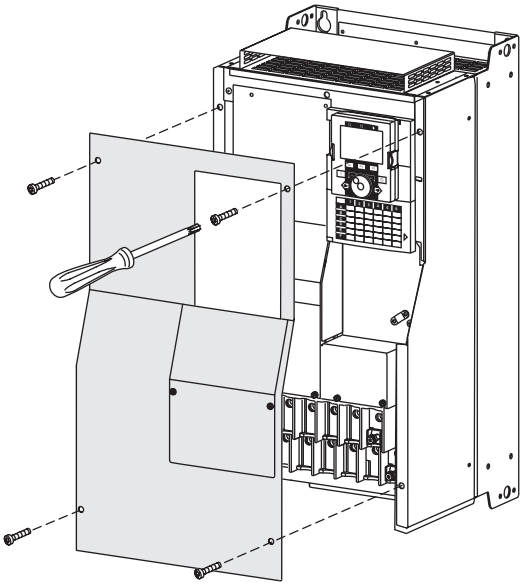

Cubicle installation for >*pDRIVE*< *MX pro* 4V0,75 up to 4V18

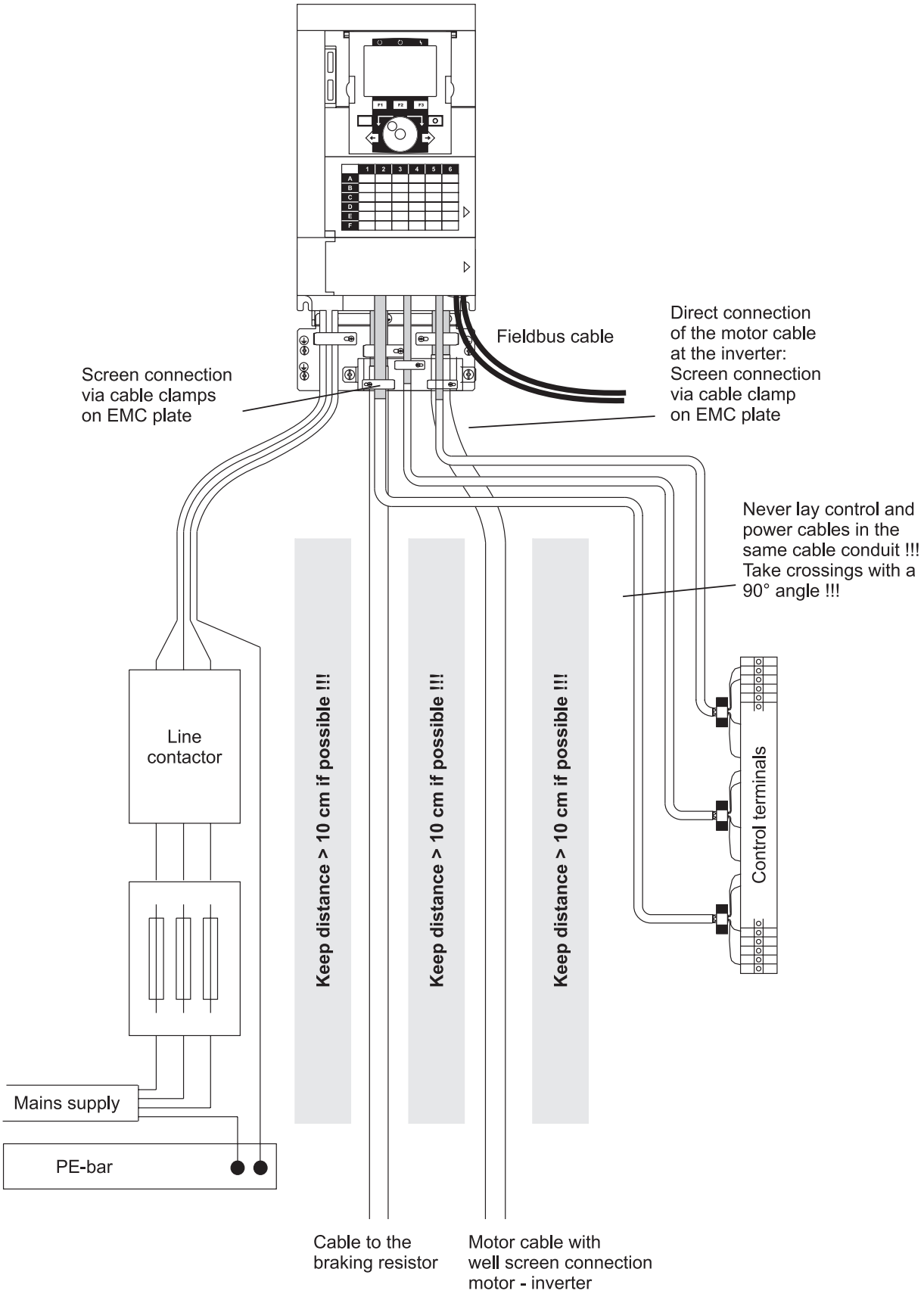

8 P01 325 EN.04/04 HMHF

Cubicle installation for >*pDRIVE*< *MX pro* 4V22 up to 4V500/630

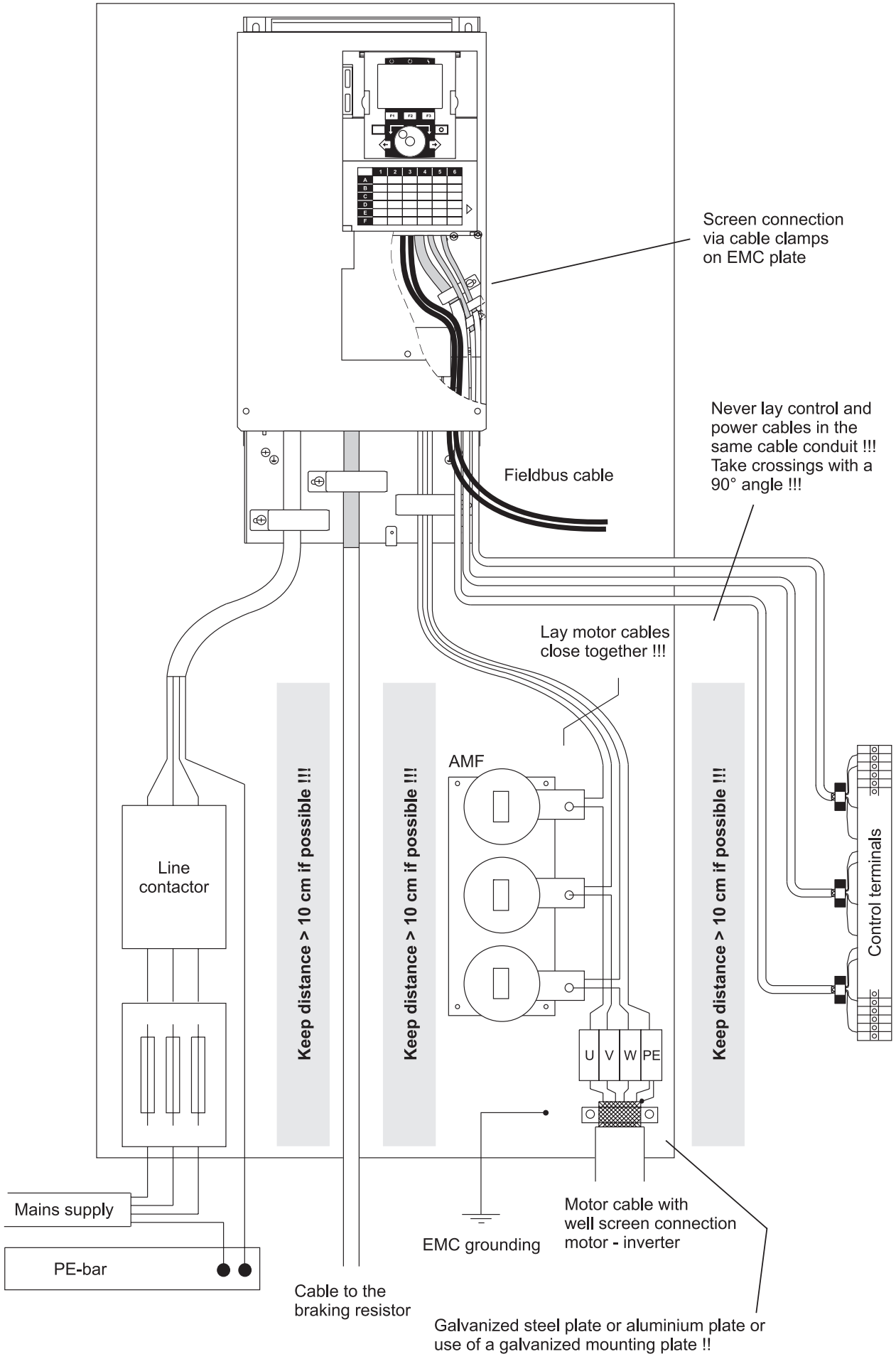

HMHF

8 P01 325 EN.04/04

Specification of the control terminals

Safe Standstill

The *>pDRIVE< MX pro* frequency inverters include the "Safe Standstill" function as standard (Power Removal, certificate no. 72148-2 /2006). This function prevents any unintended start-up of the motor and guarantees the safety of the machine and plant personnel.

This safety function complies with:

- the standard for safety of machinery EN 954-1 / ISO 13849-1, category 3
- the standard for functional safety IEC/EN 61508, SIL2 capability
  (functional safety of processes and systems and electrical/electronic/programmable electronic safetyrelated systems)

  The SIL (Safety Integrity Level) capability depends on the connection diagram for the drive and for the safety function. Failure to observe the setup recommendations could inhibit the SIL capability of the "Power Removal" safety function.
- the definition of the product standard IEC/EN 61800-5-2 for both stop functions:
  - Safe Torque Off (“STO”)
  - Safe Stop 1 (“SS1”)

Following circuit variations are provided and detailed described in the catalogue:

Circuit variation	Safety function
using a line contactor	**Safety category 1** according to EN 954-1 category 1; IEC/EN 61508, SIL1 **Stop category 0** according to IEC/EN 60204-1
using a motor switch	**Safety category 1** according to EN 954-1 category 1; IEC/EN 61508, SIL1 **Stop category 0** according to IEC/EN 60204-1
using the digital input PWR "Safe Standstill"	**Safety category 3** according to EN 954-1 category 3; IEC/EN 61508, SIL2 **Stop category 0** according to IEC/EN 60204-1
using the digital input PWR "Safe Standstill" with controlled deceleration	**Safety category 3** according to EN 954-1 category 3; IEC/EN 61508, SIL2 **Stop category 1** according to IEC/EN 60204-1

The ground (0 V) can float up to 35 V compared to PE. The connection 0 V – ground which is necessary to limit the voltage can therefore e.g. also occur far away in the PLC (if necessary by the analog output related to 0 V).

The analog input AI1 with differential amplifier (as well as AI3 of the option card IO12) enables the reference assignment decoupled from the ground.

Keep the maximum cable length of 15 m for the wiring of the safety input PWR "Safe standstill".

The device fulfills all requirements for protective separation between power and electronic connections according to EN 61800-5-1.

Also all connected circuits must fulfil the requirements for protective separation to guarantee protective separation.

Standard control terminals of the frequency inverter

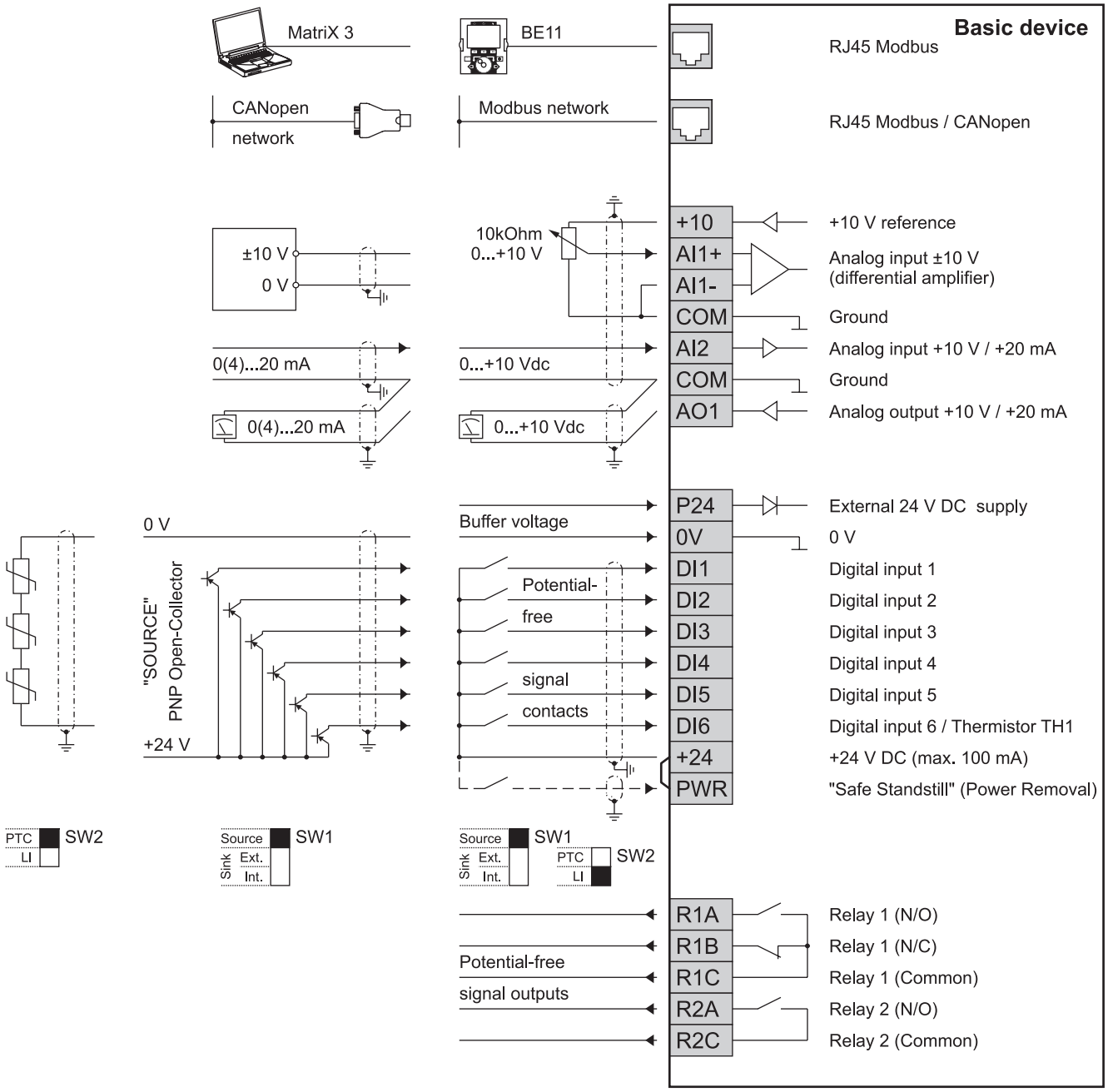

The use of the individual inputs and outputs as well as their limits can be adjusted by means of the device software. Only the alternative use of the digital input DI6 for motor thermistor monitoring and the selection of the switching method for all digital inputs has to be adjusted by means of the sliding switch.

The inverters >*pDRIVE*< *MX pro* are equipped with a built-in interface for control via Modbus. In addition to the external wiring (connection to the T-pieces in the bus line) only the adjustment of few parameters is necessary.

Alternatively, this interface can be also used for the CANopen bus. Therefore, an adapter is required for conversion of the RJ45 plug to SUB-D (CANopen standard CiA DRP 303-1). The bus wiring is taken by connection to the next device.

HMHF
8 P01 325 EN.04/04

Specifications of the standard control terminals in the inverter

Terminal	Designation	Specification
+10	Voltage supply for potentiometer 1...10 kΩ	+10 V DC (10.5 V ±0.5 V) max. 10 mA; short-circuit-proof
AI1+ AI1-	Analog input AI1 (Usage and limits can be parameterized)	-10...+10 V DC, differential amplifier, floating up to max. 24 V *) Reaction time 2 ms ±0.5 ms, resolution 11 Bits + 1 sign bit, accuracy ±0.6 % at Δϑ = 60 °C (140 °F), linearity ±0.15 %
COM	Ground	0 V reference potential for analog in-/outputs
AI2	Analog input AI2 (Selection, usage and limits can be parameterized)	– 0...+10 V DC (floating up to max. 24 V), impedance 30 kΩ *) or – 0(4)...20 mA, impedance 250 Ω Reaction time 2 ms ±0.5 ms, resolution 11 Bits, Accuracy ±0.6 % at Δϑ = 60 °C (140 °F), linearity ±0.15 %
COM	Ground	0 V reference potential for analog in-/outputs
AO1	Analog output AO1 (Selection, usage and limits can be parameterized)	– 0...+10 V DC, min. load impedance 500 Ω *) or – 0(4)...20 mA, max. load impedance 500 Ω Resolution 10 Bits, reaction time 2 ms ± 0.5 ms, accuracy ±1 % at Δϑ = 60 °C (140 °F), linearity ±0.2 %
P24	Supply buffer voltage	+24 V DC (min. 19 V, max. 30 V) external supply of the control part, power demand 30 W
0 V	Ground	Reference potential of the digital inputs and 0 V of the external voltage supply P24
DI1 DI2 DI3 DI4 DI5	Digital inputs DI1...DI5 (Usage can be parameterized, Sink/Source-switching with selector switch SW1)	+24 V DC (max. 30 V), impedance 3.5 kΩ, reaction time 2 ms ±0.5 ms Positive logic (Source) or negative logic (Sink) compatible with Level 1 PLC Standard IEC 65A-68 SW1 at Source (factory setting): High > 11 V DC, Low < 5 V DC SW1 at Sink Int. or Sink Ext.: High < 10 V DC, Low > 16 V DC
DI6 (TH1)	Digital input DI6 or thermistor input 1 (Usage can be parameterized, Sink/Source-switching with selector switch SW2)	– *Selector switch SW2 at LI (factory setting):* Digital input DI6, same data as with DI1 up to DI5 – *Selector switch SW2 at PTC:* Thermistor TH1, for max. 6 PTC thermistors in series *) Thermistor nominal value < 1.5 kΩ, threshold value 3 kΩ, Disengaging value 1.8 kΩ, short-circuit monitoring at < 50 Ω
+24	Sampling voltage for digital inputs (Sink/Source-switching with selector switch SW1)	– *Selector switch SW1 in position Source or Sink Int.:* +24 V DC (min. 21 V, max. 27 V), short-circuit proof max. 100 mA (incl. all options) – *Selector switch SW1 in position Sink Ext.:* Input for external voltage supply +24 V DC of the digital inputs
PWR	Input of the safety function "Safe Standstill" (Power Removal)	Digital input 24 V DC (max. 30 V) *) Impedance 1.5 kΩ, filter time 10 ms, High > 17 V, Low < 2 V If PWR is not connected to 24 V, the starting of the motor is not possible (according to the standard for functional safety EN 954-1 / ISO 13849-1, IEC / EN 61508) and IEC/EN 61800-5-2
R1A R1B R1C	Relay output 1 (R1A N.O. contact, R1B N.C. contact)	Switching capacity min. 3 mA at 24 V DC (relay as good as new) Switching capacity max. 5 A at 250 V AC (cos φ = 1) or 30 V DC, max. 2 A at 250 V AC (cos φ = 0.4) or 30 V DC (L/R = 7 ms) Reaction time 7 ms ±0.5 ms, life cycle of 100.000 switching cycles at max. switching capability Sampling voltage must correspond to overvoltage category II so that the PELV conditions for the remaining control terminals are fulfilled.
R2A R2C	Relay output 2 (R2A N.O. contact)	

Max. connection cross-section: 1.5 mm² (AWG16), 0.25 Nm (2.5 mm² (AWG14), 0.6 Nm for relay terminals)

*) Screen the wiring and lay the cables separate from the motor cable !
The maximum cable length is 20 m for thermistor input TH1 and 15 m for the safety input PWR "Safe Standstill".

Control terminals of option card IO11

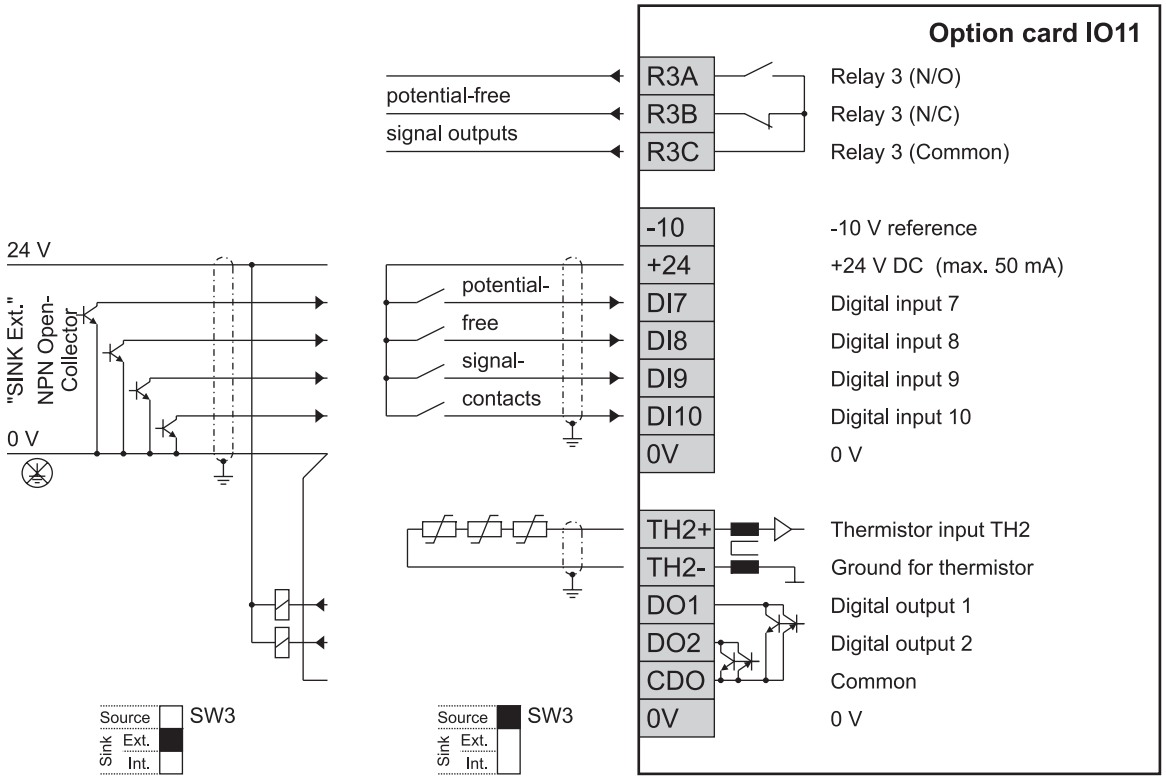

The terminal extension *>pDRIVE< IO11* is a cost-effective solution with additional digital inputs and outputs, one relay output and one high-quality thermistor input. The card cannot be used twice.

The setting for positive or negative logic of the option card can be taken independent from the digital inputs of the basic device by means of the sliding switch SW3.

Parameters which belong to the inputs and outputs of the option cards are only available at the inverter when the card(s) are plugged. Thus, wrong parameterization of functions close to the terminals is extensively prevented.

HMHF
8 P01 325 EN.04/04

Specification of the control terminals at option card IO11

Terminal	Designation	Specification
R3A R3B R3C	Relay output 3 R3A N.O. contact, R3B N.C. contact)	Switching capacity min. 3 mA at 24 V DC (relay as good as new) Switching capacity max. 5 A at 250 V AC (cos φ = 1) or 30 V DC, max. 2 A at 250 V AC (cos φ = 0.4) or 30 V DC (L/R = 7 ms) Reaction time 7 ms ±0.5 ms, life cycle of 100.000 switching cycles at max. switching capability Sampling voltage must correspond to overvoltage category II so that the PELV conditions for the remaining control terminals are fulfilled.
-10	Voltage supply for potentiometer 1...10 kΩ	-10 V DC (-10.5 V ±0.5 V) max. 10 mA; short-circuit-proof
+24	Sampling voltage for digital inputs (Sink/Source-switching with selector switch SW3)	– *Selector switch SW3 in position Source or Sink Int.:* +24 V DC (min. 21 V, max. 27 V), short-circuit proof max. 50 mA (for basic device and options) – *Selector switch SW3 in position Sink Ext.:* Input for external voltage supply +24 V DC of the digital inputs
DI7 DI8 DI9 DI10	Digital inputs DI7...DI10 (Usage can be parameterized, Sink/Source-switching with selector switch SW1)	+24 V DC (max. 30 V), impedance 3.5 kΩ, reaction time 2 ms ±0.5 ms Positive logic (Source) or negative logic (Sink) compatible with Level 1 PLC Standard IEC 65A-68 SW3 at Source (factory setting): High > 11 V DC, Low < 5 V DC SW3 at Sink Int. or Sink Ext.: High < 10 V DC, Low > 16 V DC
0 V	Ground	0 V reference potential for digital inputs
TH2+ TH2-	Thermistor input 2	for max. 6 PTC thermistors in series *) Thermistor nominal value < 1.5 kΩ, threshold value 3 kΩ, Disengaging value 1.8 kΩ, short-circuit monitoring at < 50 Ω
DO1	Digital output DO1 (Usage can be parameterized)	+24 V DC Open-Collector-Outputs, floating ground Positive logic (Source) or negative logic (Sink) compatible with Level 1 PLC Standard IEC 65A-68 Switching capacity max. 200 mA at 12...30 VDC Reaction time: 2 ms ±0.5 ms
DO2	Digital output DO2 (Usage can be parameterized)	
CDO	Common	Reference potential of the digital outputs
0 V	Ground	0 V general use

Max. connection cross-section: 1.5 mm² (AWG16), 0.25 Nm (2.5 mm² (AWG14), 0.6 Nm for relay terminals)

*) Screen the wiring and lay the cables separate from the motor cable !

Control terminals of option card IO12

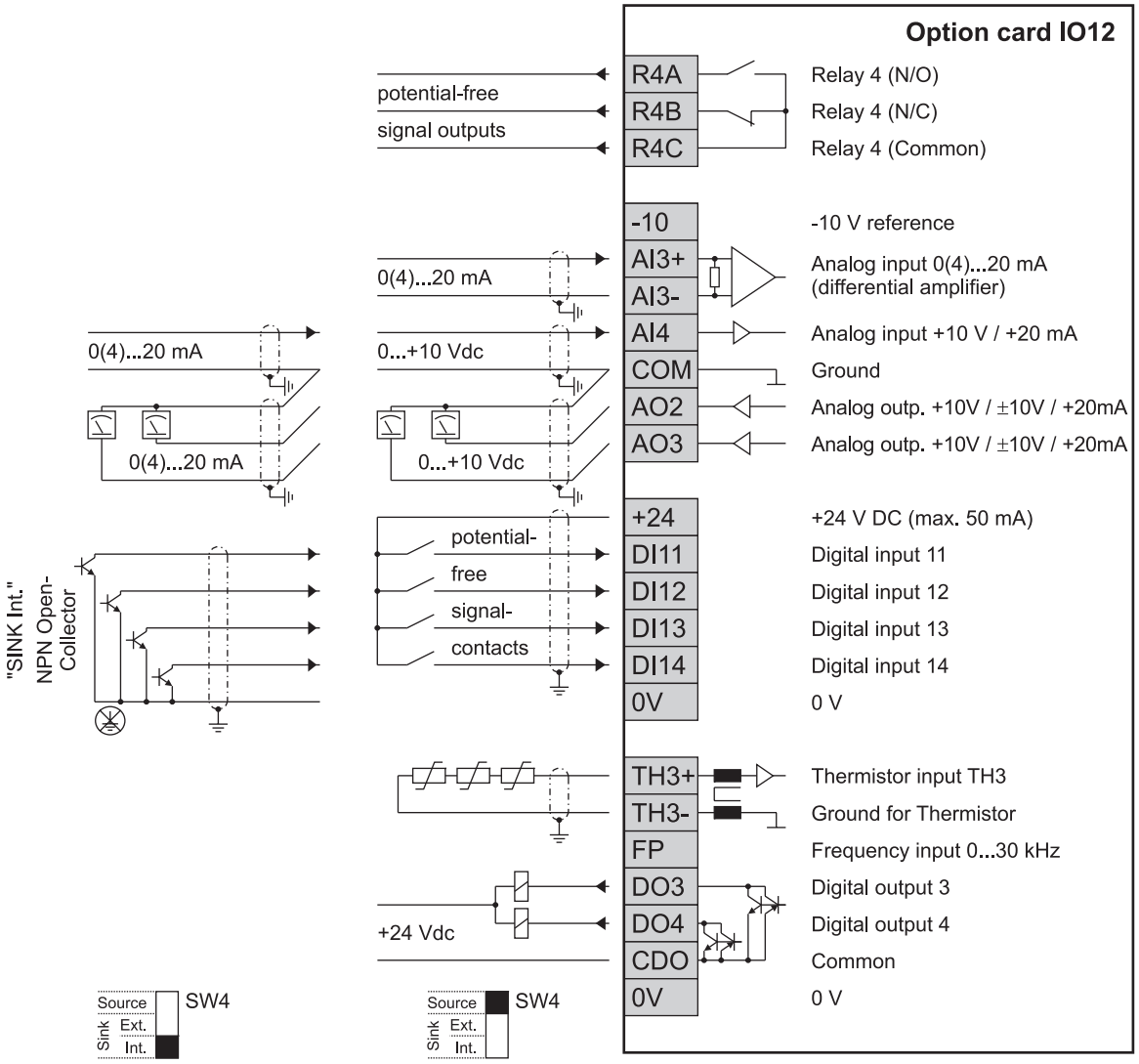

The terminal extension >*pDRIVE*< *IO12* can be plugged in addition or as an alternative to the option >*pDRIVE*< *IO11*. The card cannot be used twice.

The setting for positive or negative logic of the option card can be taken independent from the digital inputs of the basic device by means of the sliding switch SW4.

HMHF
8 P01 325 EN.04/04

Specification of the control terminals at option card IO12

Terminal	Designation	Specification
R4A R4B R4C	Relay output 4 (R4A N.O. contact, R4B N.C. contact)	Switching capacity min. 3 mA at 24 V DC (relay as good as new) Switching capacity max. 5 A at 250 V AC (cos φ = 1) or 30 V DC, max. 2 A at 250 V AC (cos φ = 0.4) or 30 V DC (L/R = 7 ms) Reaction time 10 ms ±0.5 ms, life cycle of 100.000 switching cycles at max. switching capability Sampling voltage must correspond to overvoltage category II so that the PELV conditions for the remaining control terminals are fulfilled.
-10	Voltage supply for potentiometer 1...10 kΩ	-10 V DC (-10.5 V ±0.5 V) max. 10 mA; short-circuit-proof
AI3+ AI3-	Analog input AI3 (Usage and limits can be parameterized)	0(4)...20 mA, differential amplifier, impedance 250 Ω, Reaction time 5 ms ±1 ms, resolution 11 Bits + 1 sign bit, accuracy ±0.6 % at Δϑ = 60 °C (140 °F), linearity ±0.15 %
AI4	Analog input AI4 (Selection, usage and limits can be parameterized)	– 0...+10 V DC (floating up to max. 24 V), impedance 30 kΩ *) or – 0(4)...20 mA, impedance 250 Ω Reaction time 5 ms ±1 ms, resolution 11 Bits, Accuracy ±0.6 % at Δϑ = 60 °C (140 °F), linearity ±0.15 %
COM	Ground	0 V reference potential for analog in-/outputs
AO2	Analog output AO2	– 0...10 V DC or -10/+10 V DC according to software configuration, min. load impedance 500 Ω *) or – 0(4)...20 mA, max. load impedance 500 Ω Resolution 10 Bits, reaction time 5 ms ±1 ms, accuracy ±1 % at Δϑ = 60 °C (140 °F), linearity ±0.2 %
AO3	Analog output AO3	
+24	Sampling voltage for digital inputs (Sink/Source-switching with selector switch SW4)	– *Selector switch SW4 in position Source or Sink Int.:* +24 V DC (min. 21 V, max. 27 V), short-circuit proof max. 50 mA (for basic device and options) – *Selector switch SW4 in position Sink Ext.:* Input for external voltage supply +24 V DC of the digital inputs
DI11 DI12 DI13 DI14	Digital inputs DI11...DI14 (Usage can be parameterized, Sink/Source-switching with selector switch SW4)	+24 V DC (max. 30 V), impedance 3.5 kΩ, reaction time 5 ms ±1 ms Positive logic (Source) or negative logic (Sink) compatible with Level 1 PLC Standard IEC 65A-68 SW4 at Source (factory setting): High > 11 V DC, Low < 5 V DC SW4 at Sink Int. or Sink Ext.: High < 10 V DC, Low > 16 V DC
0 V	Ground	0 V reference potential for digital inputs
TH3+ TH3-	Thermistor input 3	for max. 6 PTC thermistors in series *) Thermistor nominal value < 1.5 kΩ, threshold value 3 kΩ, Disengaging value 1.8 kΩ, short circuit monitoring at < 50 Ω,
FP	Frequency input FP	Frequency range 0...30 kHz, 1:1 ±10 %, reaction time 5 ms ±1 ms Input voltage 5 V DC, 15 mA Series resistor for 12 V = 510 Ω, for 15 V = 910 Ω, for 24 V = 1.3 kΩ (max. 30 V); High > 3.5 V, Low < 1.2 V
DO3	Digital output DO3 (Usage can be parameterized)	+24 V DC Open-Collector-Outputs, floating ground Positive logic (Source) or negative logic (Sink) compatible with Level 1 PLC Standard IEC 65A-68 Switching capacity max. 200 mA at 12...30 VDC Reaction time: 2 ms ±0.5 ms
DO4	Digital output DO4 (Usage can be parameterized)	
CDO	Common	Reference potential of the digital outputs
0 V	Ground	0 V general use

Max. connection cross-section: 1.5 mm² (AWG16), 0.25 Nm (2.5 mm² (AWG14), 0.6 Nm for relay terminals)

*) Screen the wiring and lay the cables separate from the motor cable !

Installation remarks

Wall-mounting

The >*pDRIVE*< *MX pro* is designed for installation on the wall or in an electrical room. When using the option >*pDRIVE*< *TER-BOX* and *DCL-BOX* (for devices from 90 kW on) the devices comply with protection degree IP21/31.

For devices up to 75 kW observe a distance of 50 mm sideways, from 90 kW on observe a distance of 10 mm sideways. Additionally provide sufficient free space above and below all devices to ensure unimpeded intake and blow of the cooling air.

Wall-mounting with option terminal box for frequency inverters up to 75 kW

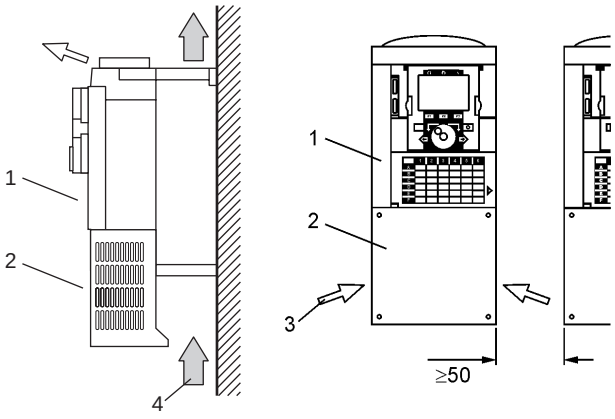

1 >*pDRIVE*< *MX pro* 4V0,75 … 4V75
2 Option >*pDRIVE*< *TER-BOX* 130...320
3 Cooling air for control part
4 Cooling air for power part

Protection degree: above IP41, all around IP21
Ambient temperature: -10...+45°C

Wall-mounting with option DCL box and option terminal box for frequency inverters from 90 kW on

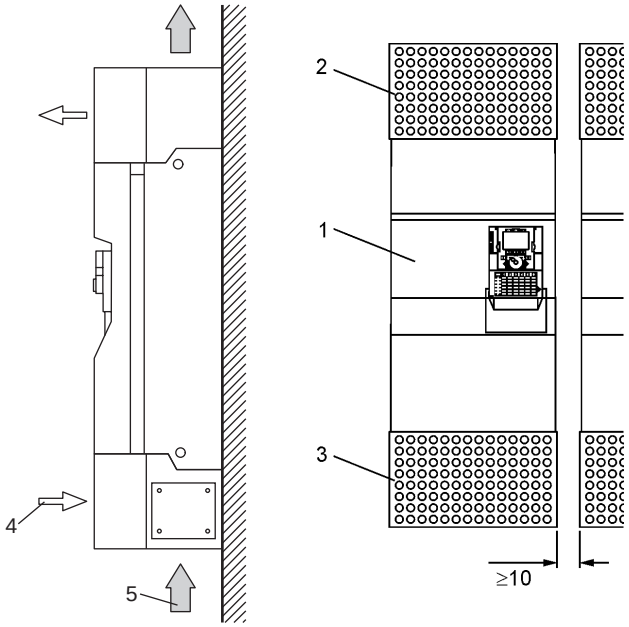

1 >*pDRIVE*< *MX pro* 4V90 … 4V630
2 Option >*pDRIVE*< *DCL-BOX*
3 Option >*pDRIVE*< *TER-BOX*
4 Cooling air for control part
5 Cooling air for power part

Protection degree: IP31
Ambient temperature: -10...+45°C

HMHF
8 P01 325 EN.04/04

Cubicle installation IP23

The stated losses and minimum cross sections for air inlet are related to the inverter. Further heat sources like DCL, NDU, AMF, fuses and contactors must be considered additionally. The power part fan which is inside the device provides the exhaust of the cubicle. The air flow must not be constrained by means of fixtures or filter mats. Provide a separation of the power part air for devices from 90 kW to avoid internal air short-cuts. Furthermore take care of an exhaust of the control part.

Cubicle installation protection degree IP23
for frequency inverters up to 75 kW

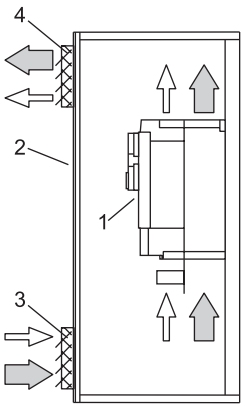

1 >*pDRIVE*< *MX pro* 4V0,75...4V75
2 Cubicle
3 Air inlet grid (without filter mat) for control part and power part
4 Air outlet grid (without filter mat) for control part and power part

Protection degree: IP23

Ambient temperature: -10...+40°C

Cubicle installation protection degree IP23
for frequency inverters from 90 kW

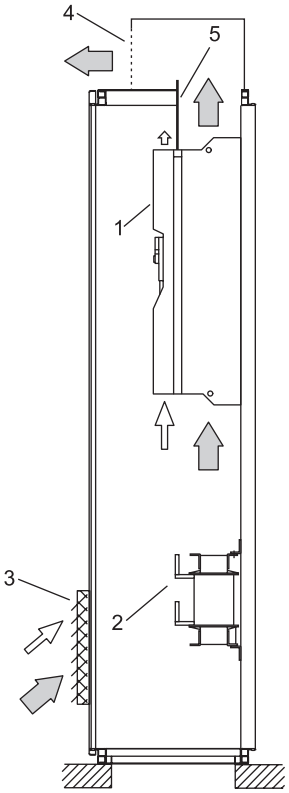

1 >*pDRIVE*< *MX pro* from 90 kW
2 Line choke option >*pDRIVE*< *NDU*
3 Air inlet grid (without filter mat) for control part and power part
4 Metal cover with splash water protection
5 Separation wall to avoid internal air short-cuts

Protection degree: IP23

Ambient temperature: -10...+40°C

For RITTAL TS8 cubicles an optional installation kit is available.

Cubicle installation IP54

Cubicle installation IP54 with separated air flow or flange mounting:

The power part of all devices is designed in IP54 and is sealed from the control electronics. In case of cubicle installation a plinth is necessary for separated air flow. The power part fan which is inside the device exhausts the losses of the power part (external). The losses of the control part must be exhausted by means of filter fans or a correspondingly large cubicle surface. The stated values for losses and volume of cooling air refer to the inverter for devices up to 75 kW, from 90 kW they refer to the inverter including a DCL-box. Further heat sources like DCL, NDU, AMF, fuses and contactors must be considered additionally.

In the power range from 22 kW a completely designed and tested cubicle design is available. Prices and technical data on request.

Cubicle installation protection degree IP54
for frequency inverters up to 75 kW

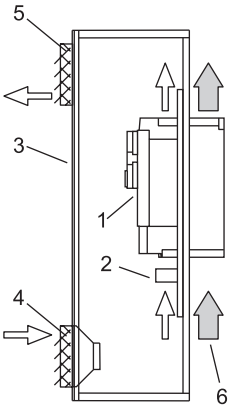

1 >*pDRIVE*< *MX pro* 4V0,75...4V75
2 >*pDRIVE*< *DCL*
3 Cubicle
4 Air inlet grid (with filter fan) for control part
5 Air outlet grid (with filter mat) for control part
6 Cooling air for power part

Protection degree: IP54
Ambient temperature: -10...+40°C

Cubicle installation protection degree IP54
for frequency inverters from 90 kW

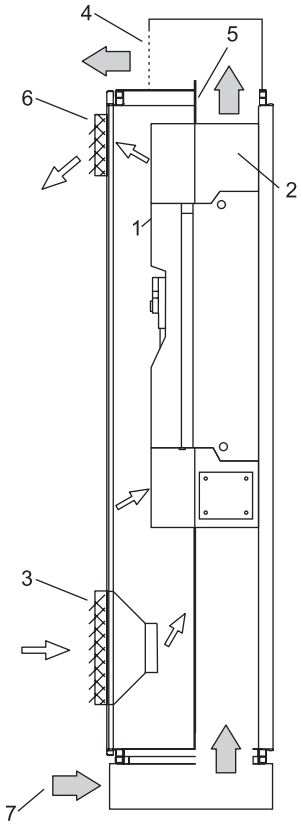

1 >*pDRIVE*< *MX pro* from 90 kW
2 >*pDRIVE*< *DCL-BOX*
3 Air inlet grid (with filter fan) for control part
4 Metal cover with splash water protection
5 Separation wall to avoid internal air short-cuts
6 Air outlet (with filter mat) for control part
7 Cooling air for power part

Protection degree: IP54
Ambient temperature: -10...+40°C

HMHF
8 P01 325 EN.04/04

Dimensions

>pDRIVE< MX pro 4V0,75...4V2,2

Dimensions

with 2 option cards

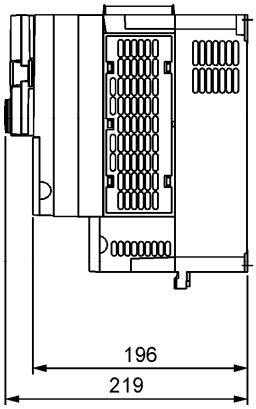

with 1 option card

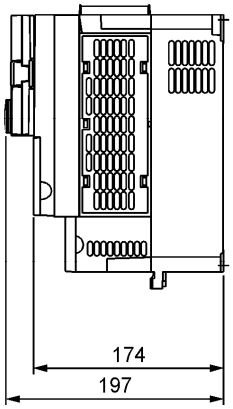

Basic device without option card

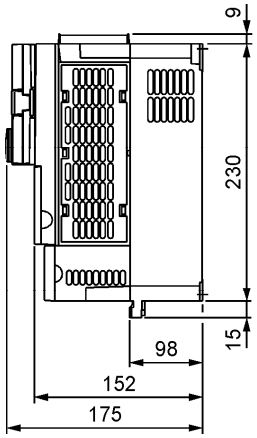

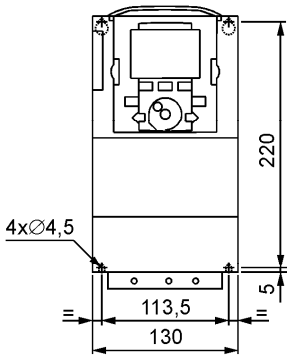

HMHF

Power terminals

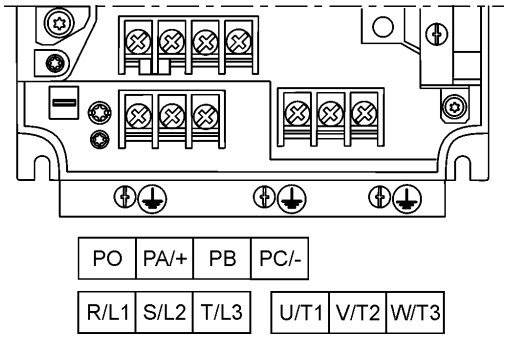

Terminal width:	9 mm
Screw:	M4
Tightening torque:	1.2 Nm
Max. cable section:	2.5 mm^2 with wire end ferrule 6 mm^2 with cable lug

8 P01 325 EN.04/04

Technical data

>pDRIVE< MX pro	4V0,75	4V1,5	4V2,2
Losses at 100% I_N	44 W	64 W	87 W
Volume of cooling air (IP23)	17 m^3/h	17 m^3/h	17 m^3/h
Min. air inlet/outlet (IP23)	0.5 dm^2	0.5 dm^2	0.5 dm^2
Losses internal	26 W	28 W	30 W
Losses external	18 W	36 W	57 W
Volume of cooling air (IP54)	10 m^3/h	10 m^3/h	10 m^3/h
Min. cubicle surface	0.5 m^2	0.5 m^2	0.5 m^2
Weight	3 kg	3 kg	3 kg

>pDRIVE< MX pro 4V3,0...4V4,0

Dimensions

with 2 option cards

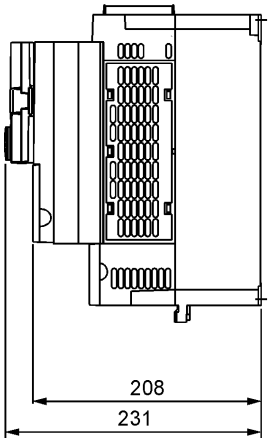

with 1 option card

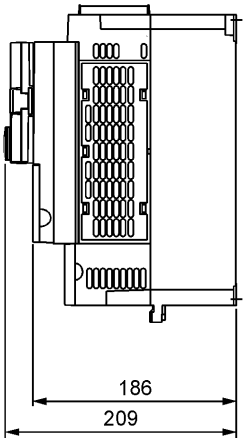

Basic device without option card

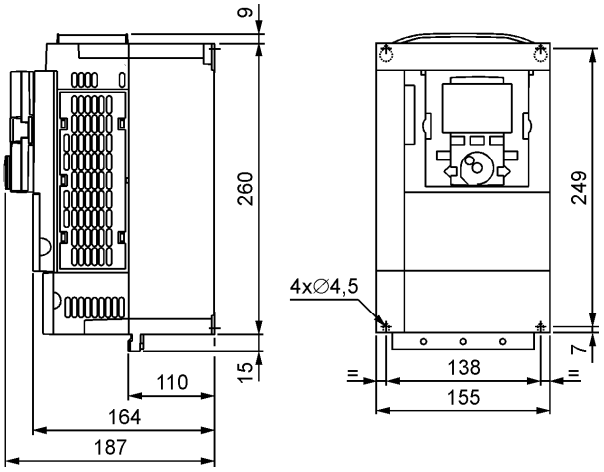

Power terminals

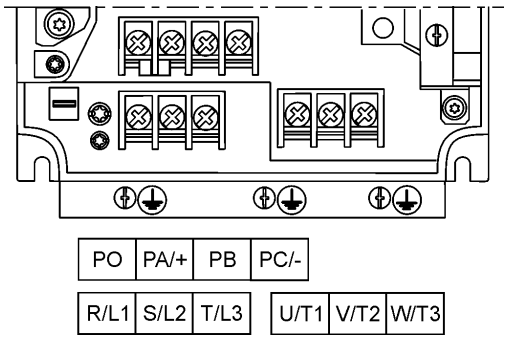

Terminal width:	9 mm
Screw:	M4
Tightening torque:	1.2 Nm
Max. cable section:	2.5 mm^2 with wire end ferrule 6 mm^2 with cable lug

Technical data

>pDRIVE< MX pro	4V3,0	4V4,0
Losses at 100% I_N	115 W	145 W
Volume of cooling air (IP23)	55 m^3/h	55 m^3/h
Min. air inlet/outlet (IP23)	1 dm^2	1 dm^2
Losses internal	35 W	40 W
Losses external	80 W	105 W
Volume of cooling air (IP54)	15 m^3/h	15 m^3/h
Min. cubicle surface	0.6 m^2	0.75 m^2
Weight	4 kg	4 kg

HMHF
8 P01 325 EN.04/04

>pDRIVE< MX pro 4V5,5...4V7,5

Dimensions

with 2 option cards

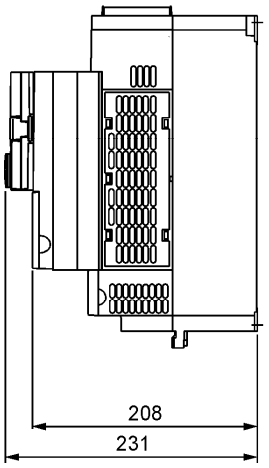

with 1 option card

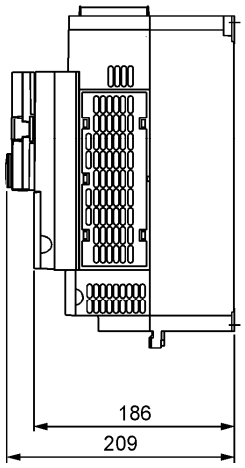

Basic device without option card

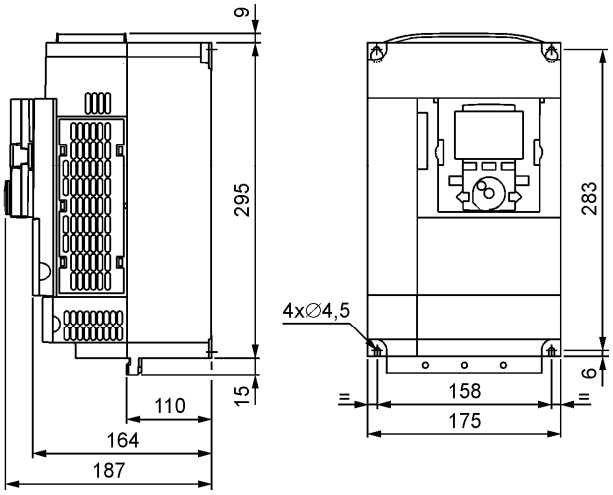

Power terminals

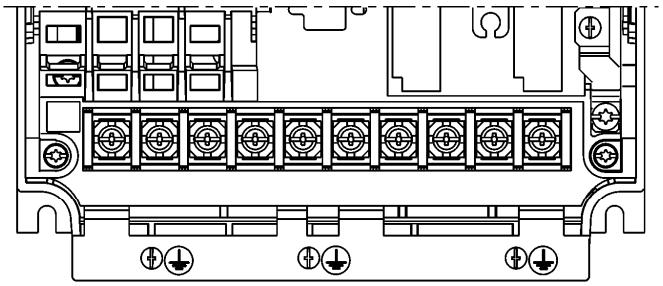

R/L1	S/L2	T/L3	PO	PA/+	PB	PC/-	U/T1	V/T2	W/T3

Terminal width:	10 mm
Screw:	M5
Tightening torque:	2 Nm
Max. cable section:	4 mm^2 with wire end ferrule 6 mm^2 with cable lug

Technical data

>pDRIVE< MX pro	4V5,5	4V7,5
Losses at 100% I_N	180 W	220 W
Volume of cooling air (IP23)	110 m^3/h	110 m^3/h
Min. air inlet/outlet (IP23)	2 dm^2	2 dm^2
Losses internal	50 W	55 W
Losses external	130 W	165 W
Volume of cooling air (IP54)	20 m^3/h	20 m^3/h
Min. cubicle surface	0.9 m^2	1 m^2
Weight	5.5 kg	5.5 kg

HMHF
8 P01 325 EN.04/04

>pDRIVE< MX pro 4V11

Dimensions

with 2 option cards

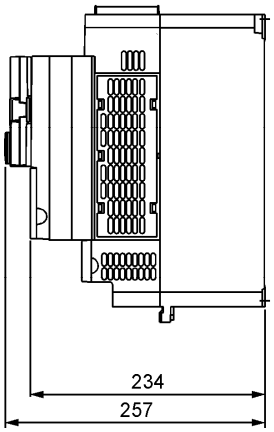

with 1 option card

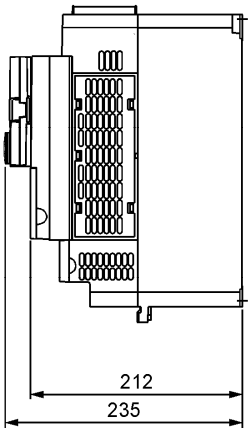

Basic device without option card

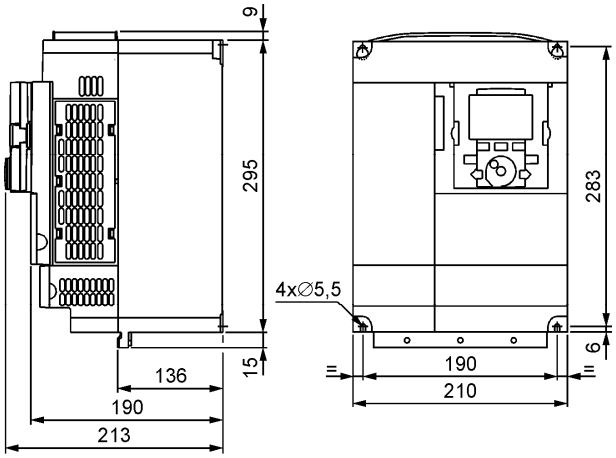

Power terminals

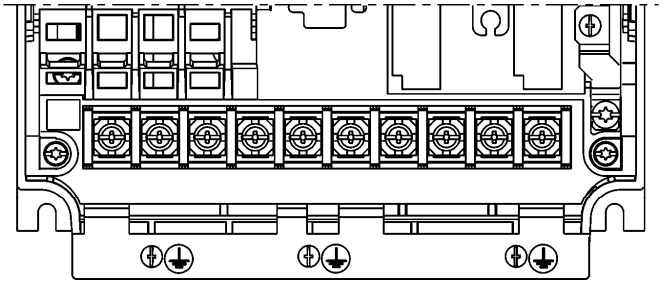

R/L1	S/L2	T/L3	PO	PA/+	PB	PC/-	U/T1	V/T2	W/T3

Terminal width:	12.5 mm
Screw:	M5
Tightening torque:	2 Nm
Max. cable section:	6 mm^2 with wire end ferrule 16 mm^2 with cable lug

Technical data

>pDRIVE< MX pro	4V11
Losses at 100% I_N	320 W
Volume of cooling air (IP23)	160 m^3/h
Min. air inlet/outlet (IP23)	2.5 dm^2
Losses internal	65 W
Losses external	255 W
Volume of cooling air (IP54)	25 m^3/h
Min. cubicle surface	1.2 m^2
Weight	7 kg

HMHF
8 P01 325 EN.04/04

>pDRIVE< MX pro 4V15...4V18

Dimensions

with 2 option cards

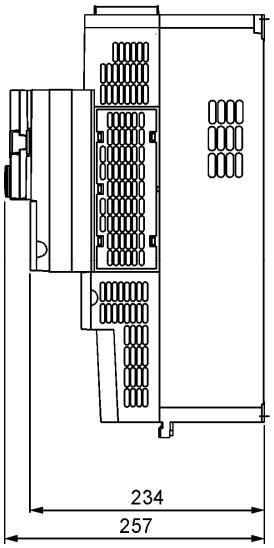

with 1 option card

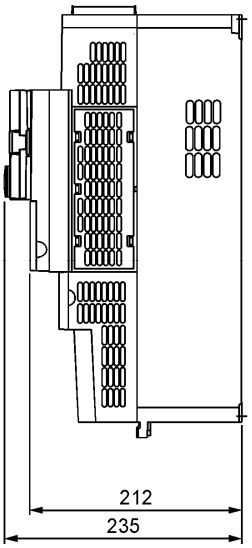

Basic device without option card

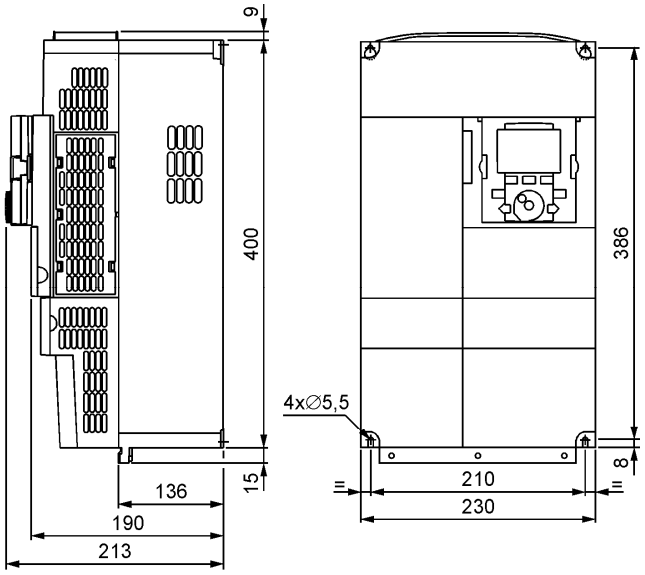

Power terminals

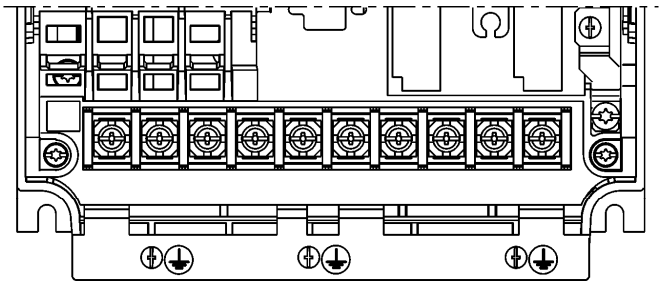

R/L1	S/L2	T/L3	PO	PA/+	PB	PC/-	U/T1	V/T2	W/T3

Terminal width:	16 mm
Screw:	M6
Tightening torque:	2.4 Nm
Max. cable section:	10 mm^2 with wire end ferrule 35 mm^2 with cable lug

Technical data

>pDRIVE< MX pro	4V15	4V18
Losses at 100% I_N	390 W	485 W
Volume of cooling air (IP23)	250 m^3/h	250 m^3/h
Min. air inlet/outlet (IP23)	3.5 dm^2	3.5 dm^2
Losses internal	85 W	85 W
Losses external	305 W	400 W
Volume of cooling air (IP54)	30 m^3/h	30 m^3/h
Min. cubicle surface	1.6 m^2	1.6 m^2
Weight	9 kg	9 kg

HMHF
8 P01 325 EN.04/04

>pDRIVE< MX pro 4V22

Dimensions

with 2 option cards

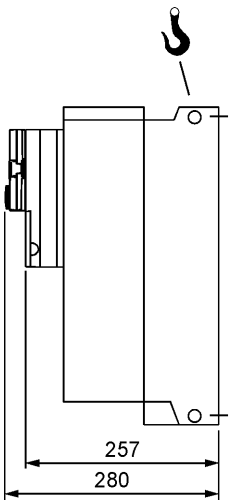

with 1 option card

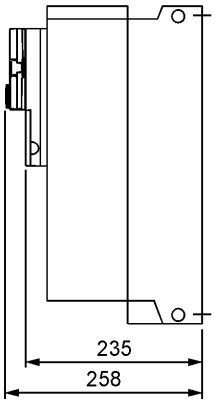

Basic device without option card

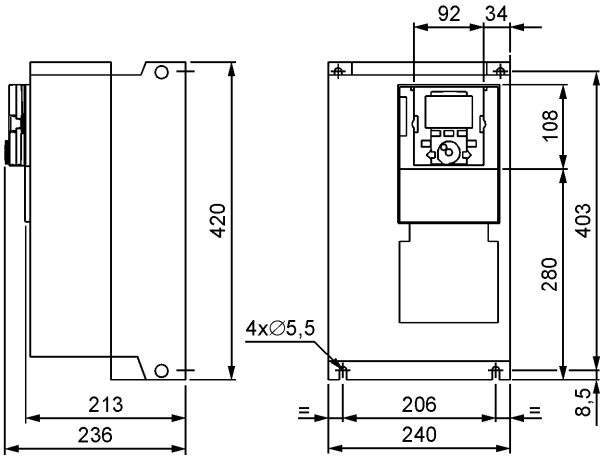

Power terminals

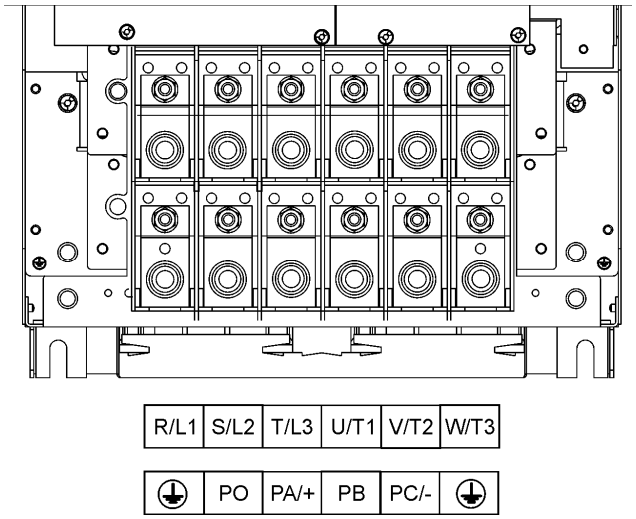

Tightening torque: 6 Nm
Max. cable section: 50 mm^2

Technical data

>pDRIVE< MX pro	4V22
Losses at 100% I_N	720 W
Volume of cooling air (IP23)	200 m^3/h
Min. air inlet/outlet (IP23)	3 dm^2
Losses internal	110 W
Losses external	610 W
Volume of cooling air (IP54)	40 m^3/h
Min. cubicle surface	2 m^2
Weight	19 kg

HMHF
8 P01 325 EN.04/04

>pDRIVE< MX pro 4V30...4V37

Dimensions

with 2 option cards | with 1 option card | Basic device without option card

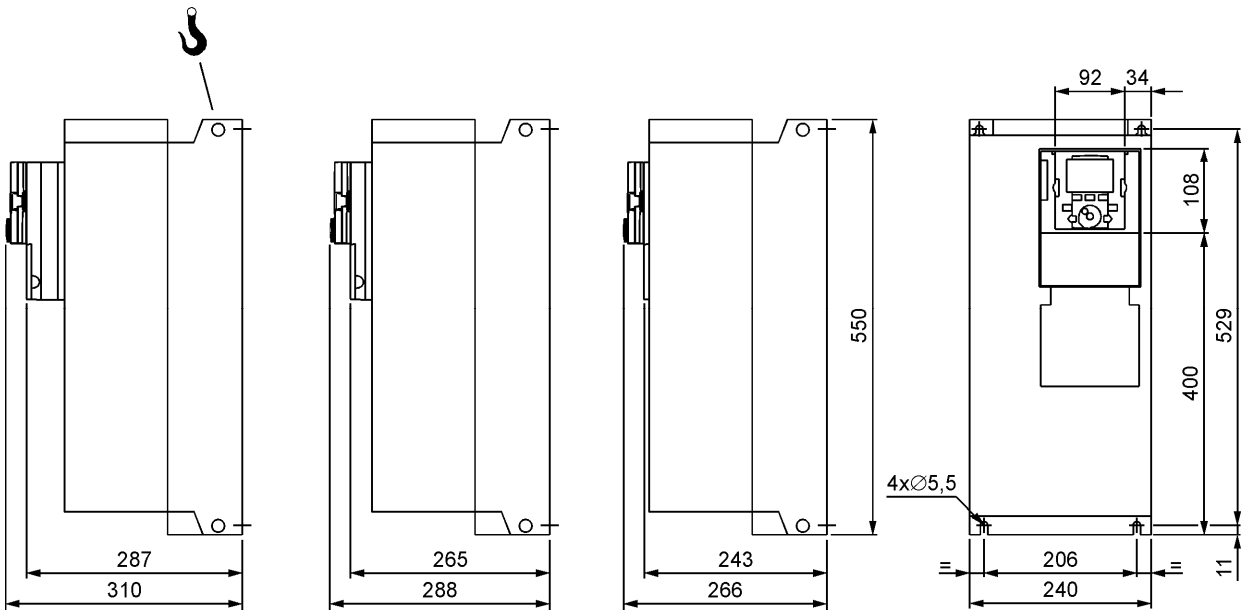

HMHF

Power terminals

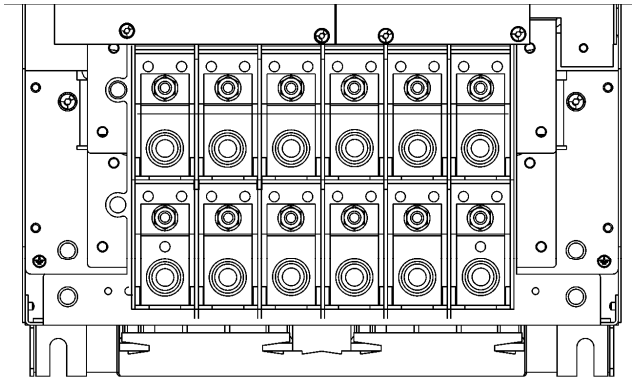

Tightening torque: 6 Nm
Max. cable section: 50 mm^2

8 P01 325 EN.04/04

Technical data

>pDRIVE< MX pro	4V30	4V37
Losses at 100% I_N	980 W	1180 W
Volume of cooling air (IP23)	200 m^3/h	200 m^3/h
Min. air inlet/outlet (IP23)	3 dm^2	3 dm^2
Losses internal	135 W	140 W
Losses external	845 W	1040 W
Volume of cooling air (IP54)	50 m^3/h	50 m^3/h
Min. cubicle surface	2.5 m^2	2.5 m^2
Weight	26 kg	26 kg

>pDRIVE< MX pro 4V45...4V75

Dimensions

with 2 option cards

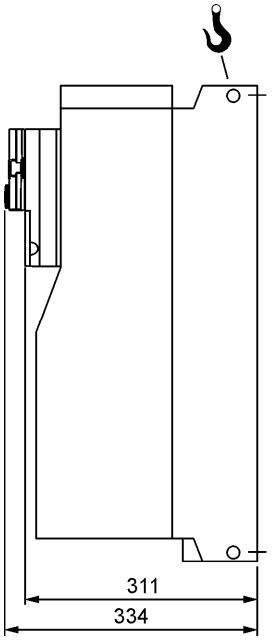

with 1 option card

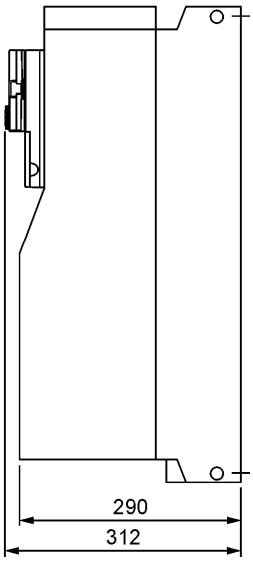

Basic device without option card

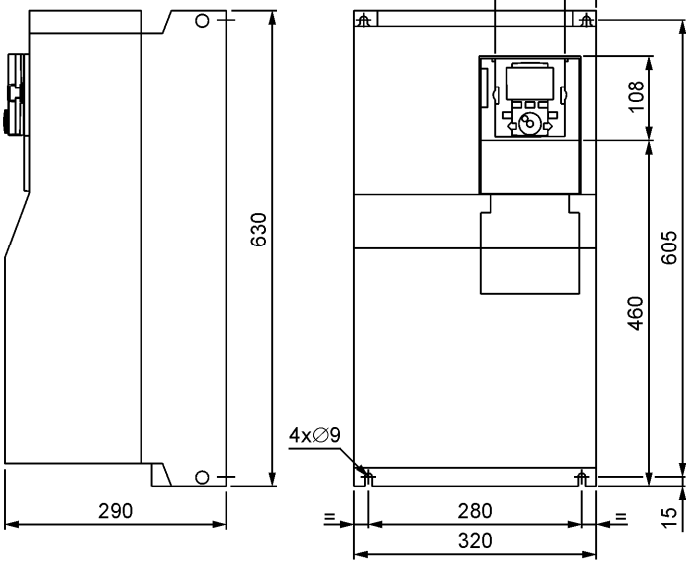

Power terminals

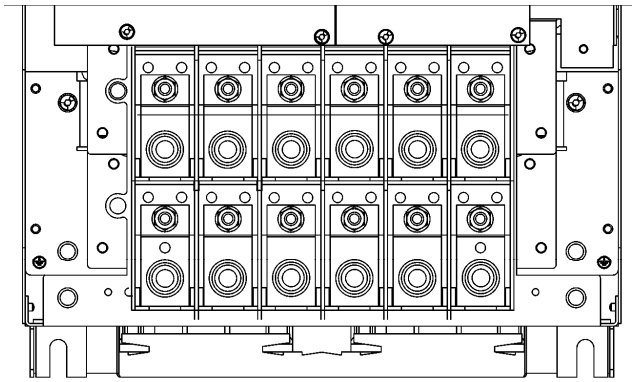

R/L1	S/L2	T/L3	U/T1	V/T2	W/T3
⏚	PO	PA/+	PB	PC/-	⏚

Tightening torque: 19 Nm
Max. cable section: 120 mm^2

Technical data

>pDRIVE< MX pro	4V45	4V55	4V75
Losses at 100% I_N	1360 W	1560 W	2320 W
Volume of cooling air (IP23)	400 m^3/h	400 m^3/h	400 m^3/h
Min. air inlet/outlet (IP23)	5 dm^2	5 dm^2	5 dm^2
Losses internal	165 W	180 W	220 W
Losses external	1195 W	1380 W	2100 W
Volume of cooling air (IP54)	60 m^3/h	60 m^3/h	70 m^3/h
Min. cubicle surface	3 m^2	3.3 m^2	4 m^2
Weight	44 kg	44 kg	44 kg

HMHF
8 P01 325 EN.04/04

>pDRIVE< MX pro 4V90/110

Dimensions

with 2 option cards

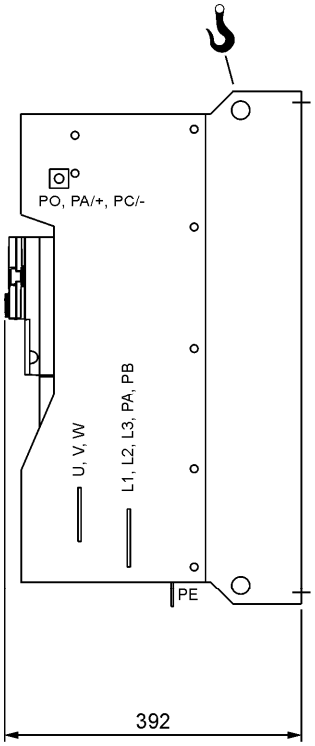

Basic device without or with 1 option card

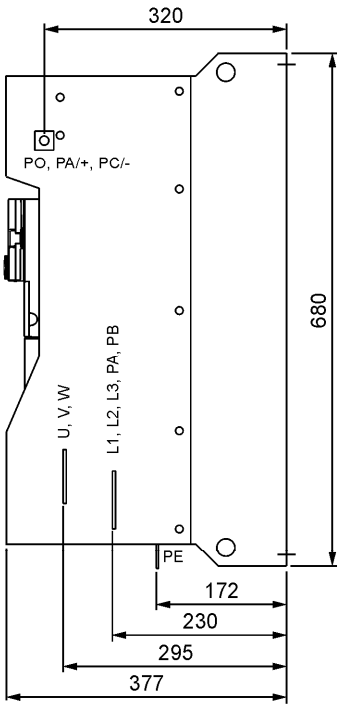

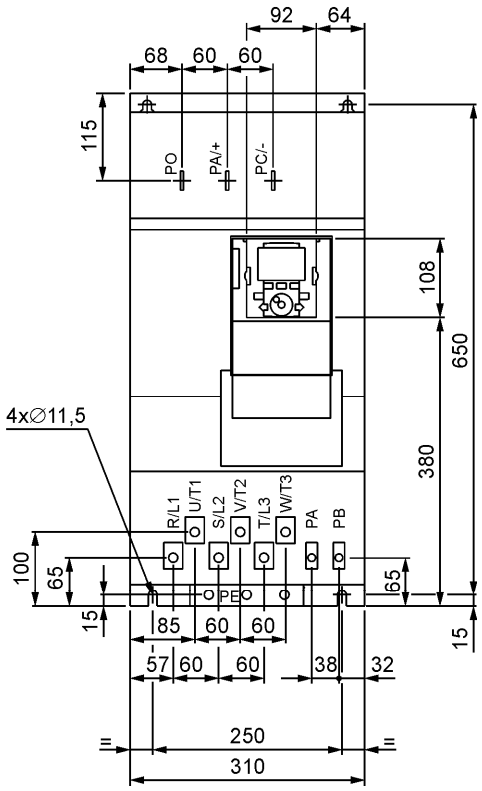

HMHF

8 P01 325 EN.04/04

Power terminals

Designation	Connection	Tightening torque	Max. connection cross-section
PA/+ and PC/-	M12	41 Nm	2x 95 mm^2
PA, PB	M8	12 Nm	2x 50 mm^2
Mains and motor	M10	24 Nm	2x 95 mm^2
PE mains and PE motor	M10	24 Nm	95 mm^2

Technical data

>pDRIVE< MX pro	4V90/110
Losses at 100% I_N	2210 W / 2810 W
Volume of cooling air (IP23)	400 m^3/h
Min. air inlet/outlet (IP23)	5 dm^2
Losses internal (incl. DCL)	240 W / 270 W
Losses external (incl. DCL)	2170 W / 2790 W
Volume of cooling air (IP54)	115 m^3/h
Weight	60 kg

>pDRIVE< MX pro 4V110/132

Dimensions

with 2 option cards

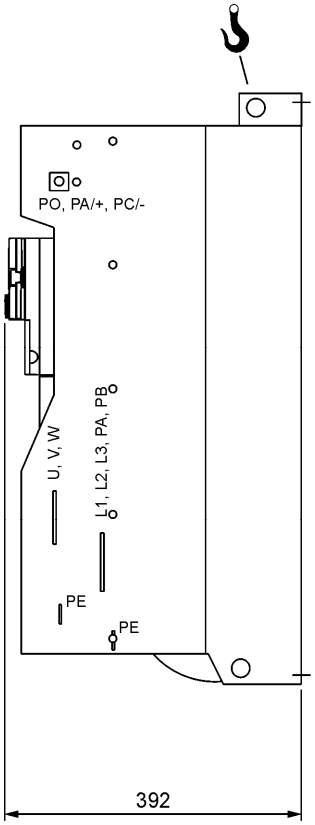

Basic device without or with 1 option card

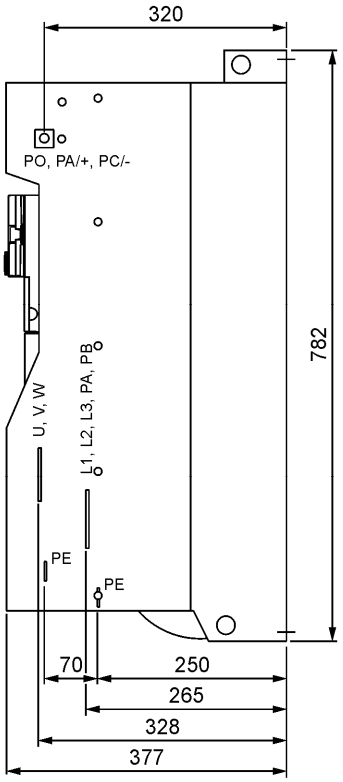

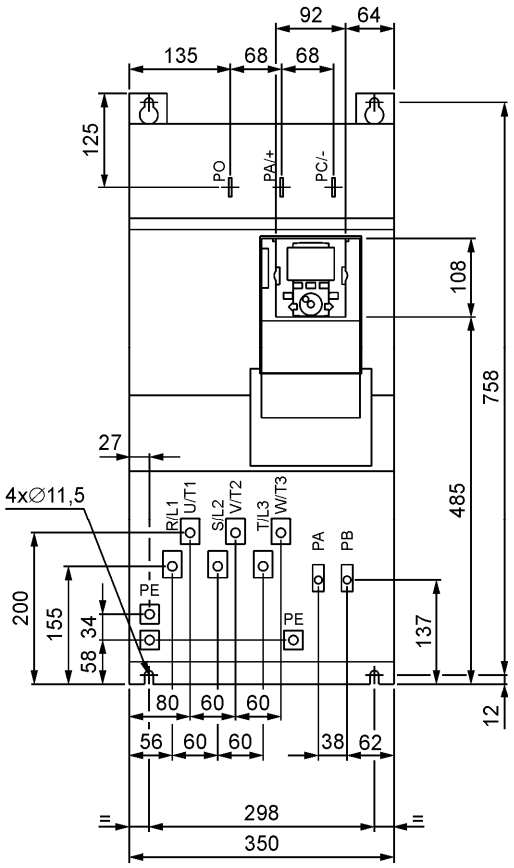

Power terminals

Designation	Connection	Tightening torque	Max. connection cross-section
PA/+ and PC/-	M12	41 Nm	2x 120 mm^2
PA, PB	M8	12 Nm	2x 50 mm^2
Mains and motor	M10	24 Nm	2x 95 mm^2
PE mains and PE motor	M10	24 Nm	95 mm^2

Technical data

>pDRIVE< MX pro	4V110/132
Losses at 100% I_N	2520 W / 3330 W
Volume of cooling air (IP23)	600 m^3/h
Min. air inlet/outlet (IP23)	7 dm^2
Losses internal (incl. DCL)	260 W / 300 W
Losses external (incl. DCL)	2460 W / 3280 W
Volume of cooling air (IP54)	145 m^3/h
Weight	74 kg

8 P01 325 EN.04/04 HMHF

>pDRIVE< MX pro 4V132/160

Dimensions

with 2 option cards

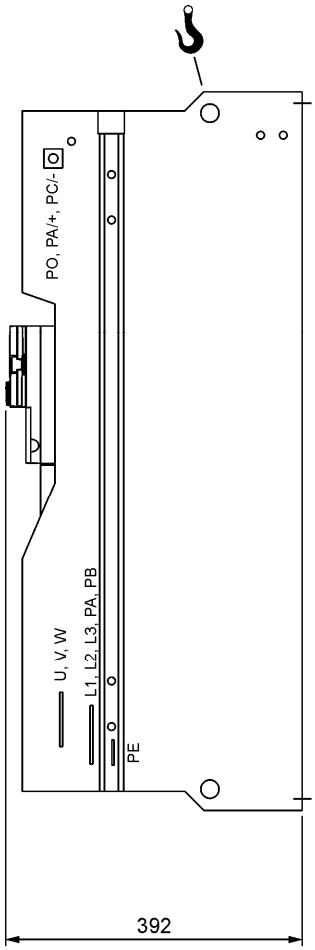

Basic device without or with 1 option card

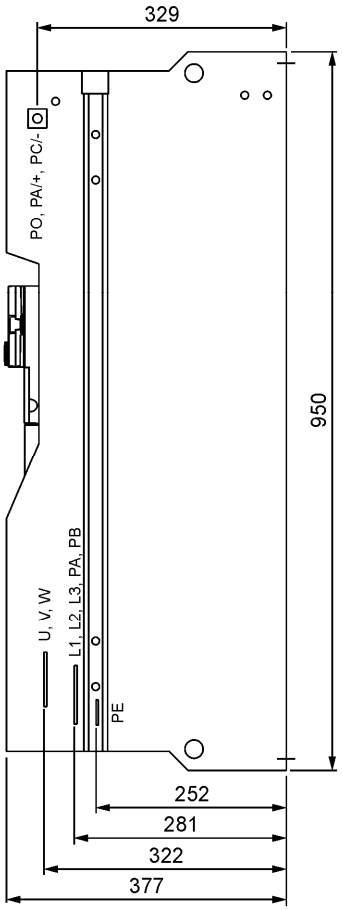

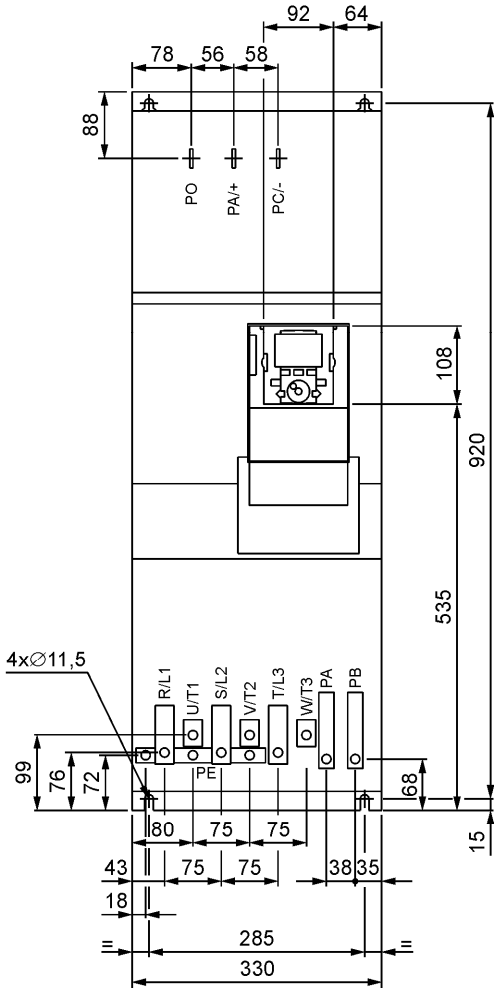

HMHF

8 P01 325 EN.04/04

Power terminals

Designation	Connection	Tightening torque	Max. connection cross-section
PA/+ and PC/-	M12	41 Nm	2x 120 mm^2
PA, PB	M10	24 Nm	120 mm^2
Mains and motor	M10	24 Nm	2x 120 mm^2
PE mains and PE motor	M10	24 Nm	120 mm^2

Technical data

>pDRIVE< MX pro	4V132/160
Losses at 100% I_N	2950 W / 3710 W
Volume of cooling air (IP23)	600 m^3/h
Min. air inlet/outlet (IP23)	7 dm^2
Losses internal (incl. DCL)	300 W / 360 W
Losses external (incl. DCL)	2900 W / 3670 W
Volume of cooling air (IP54)	165 m^3/h
Weight	80 kg

>pDRIVE< MX pro 4V160/200

Dimensions

with 2 option cards

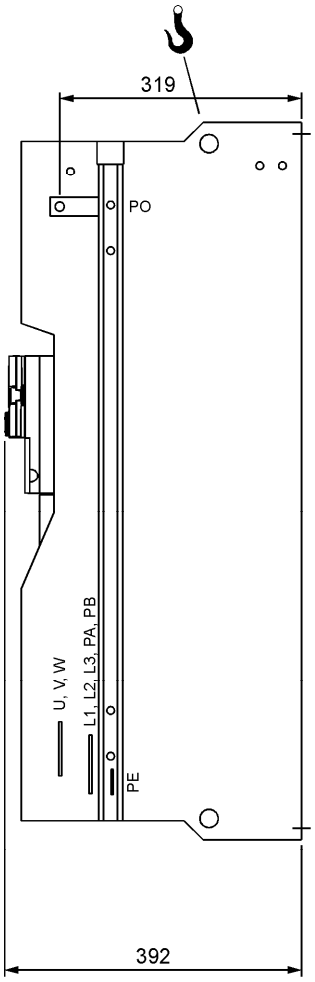

Basic device without or with 1 option card

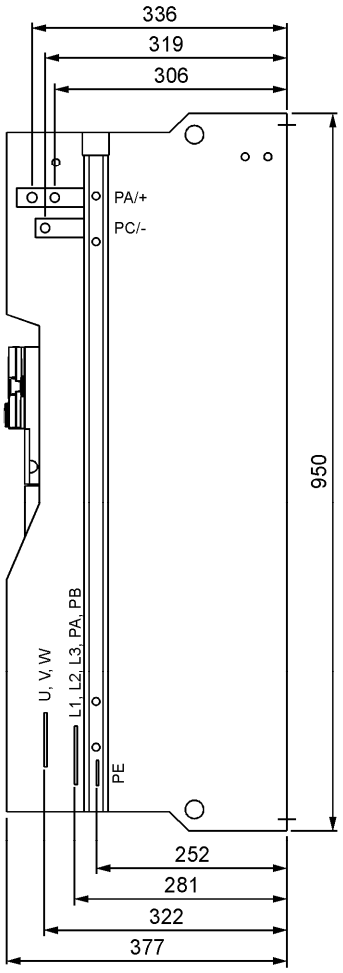

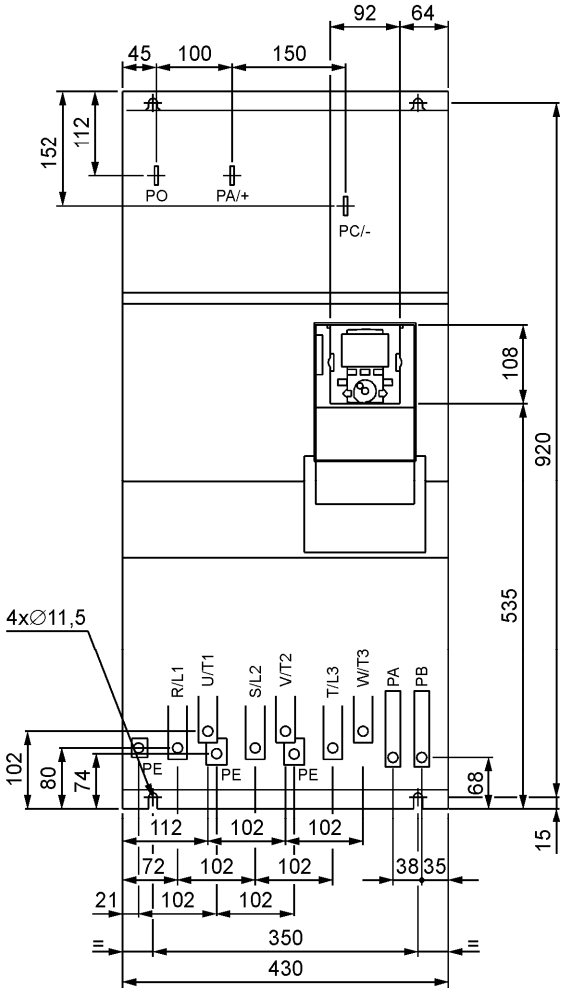

HMHF

8 P01 325 EN.04/04

Power terminals

Designation	Connection	Tightening torque	Max. connection cross-section
PA/+ and PC/-	M12	41 Nm	2x 150 mm^2
PA, PB	M10	24 Nm	120 mm^2
Mains and motor	M12	41 Nm	2x 150 mm^2
PE mains and PE motor	M12	41 Nm	150 mm^2

Technical data

>pDRIVE< MX pro	4V160/200
Losses at 100% I_N	3490 W / 4450 W
Volume of cooling air (IP23)	800 m^3/h
Min. air inlet/outlet (IP23)	8 dm^2
Losses internal (incl. DCL)	350 W / 430 W
Losses external (incl. DCL)	3460 W / 4450 W
Volume of cooling air (IP54)	200 m^3/h
Weight	110 kg

Dimensions

with 2 option cards

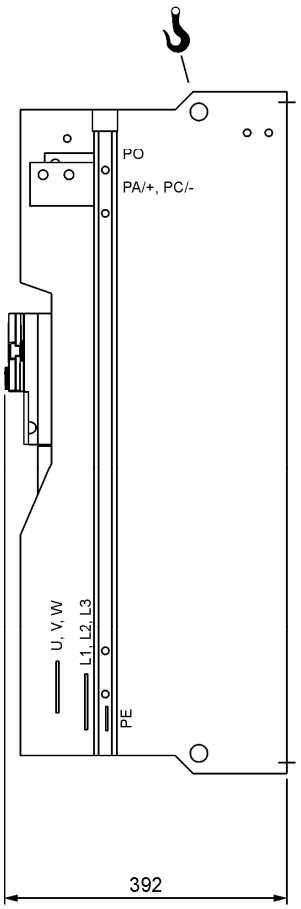

Basic device without or with 1 option card

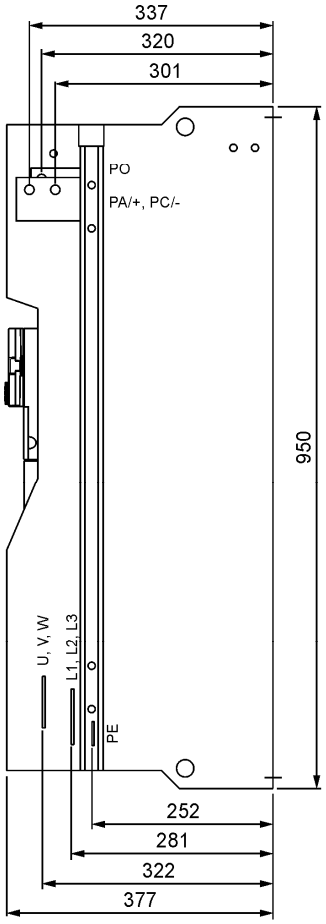

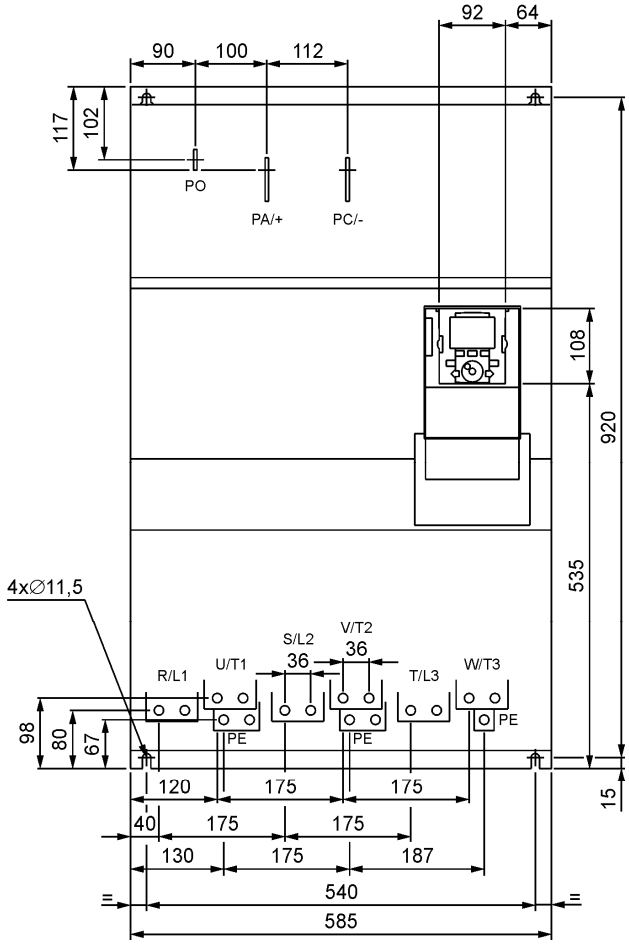

Power terminals

Designation	Connection	Tightening torque	Max. connection cross-section
PA/+ and PC/-	M12	41 Nm	4x 185 mm^2
Mains and motor	M12	41 Nm	4x 185 mm^2
PE mains and PE motor	M12	41 Nm	2x 185 mm^2

Technical data

>pDRIVE< MX pro	4V200/250	4V250/315
Losses at 100% I_N	4560 W / 5890 W	5430 W / 7250 W
Volume of cooling air (IP23)	1200 m^3/h	1200 m^3/h
Min. air inlet/outlet (IP23)	10 dm^2	10 dm^2
Losses internal (incl. DCL)	490 W / 610 W	600 W / 770 W
Losses external (incl. DCL)	4440 W / 5770 W	5290 W / 7100 W
Volume of cooling air (IP54)	270 m^3/h	330 m^3/h
Weight	140 kg	140 kg

HMHF
8 P01 325 EN.04/04

>pDRIVE< MX pro 4V315/400

Dimensions

with 2 option cards

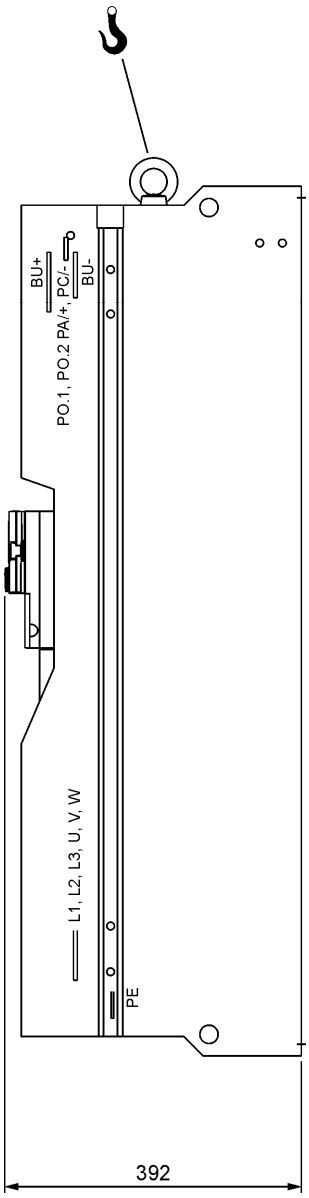

Basic device without or with 1 option card

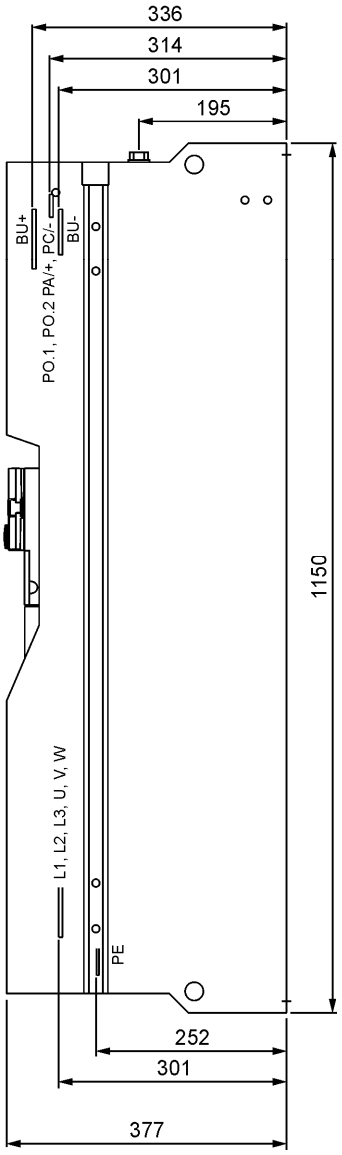

Technical data

>pDRIVE< MX pro	4V315/400
Losses at 100% I_N	6880 W / 7660 W
Volume of cooling air (IP23)	1800 m^3/h
Min. air inlet/outlet (IP23)	15 dm^2
Losses internal (incl. DCL)	770 W / 860 W
Losses external (incl. DCL)	6680 W / 7470 W
Volume of cooling air (IP54)	450 m^3/h
Weight	215 kg

8 P01 325 EN.04/04 HMHF

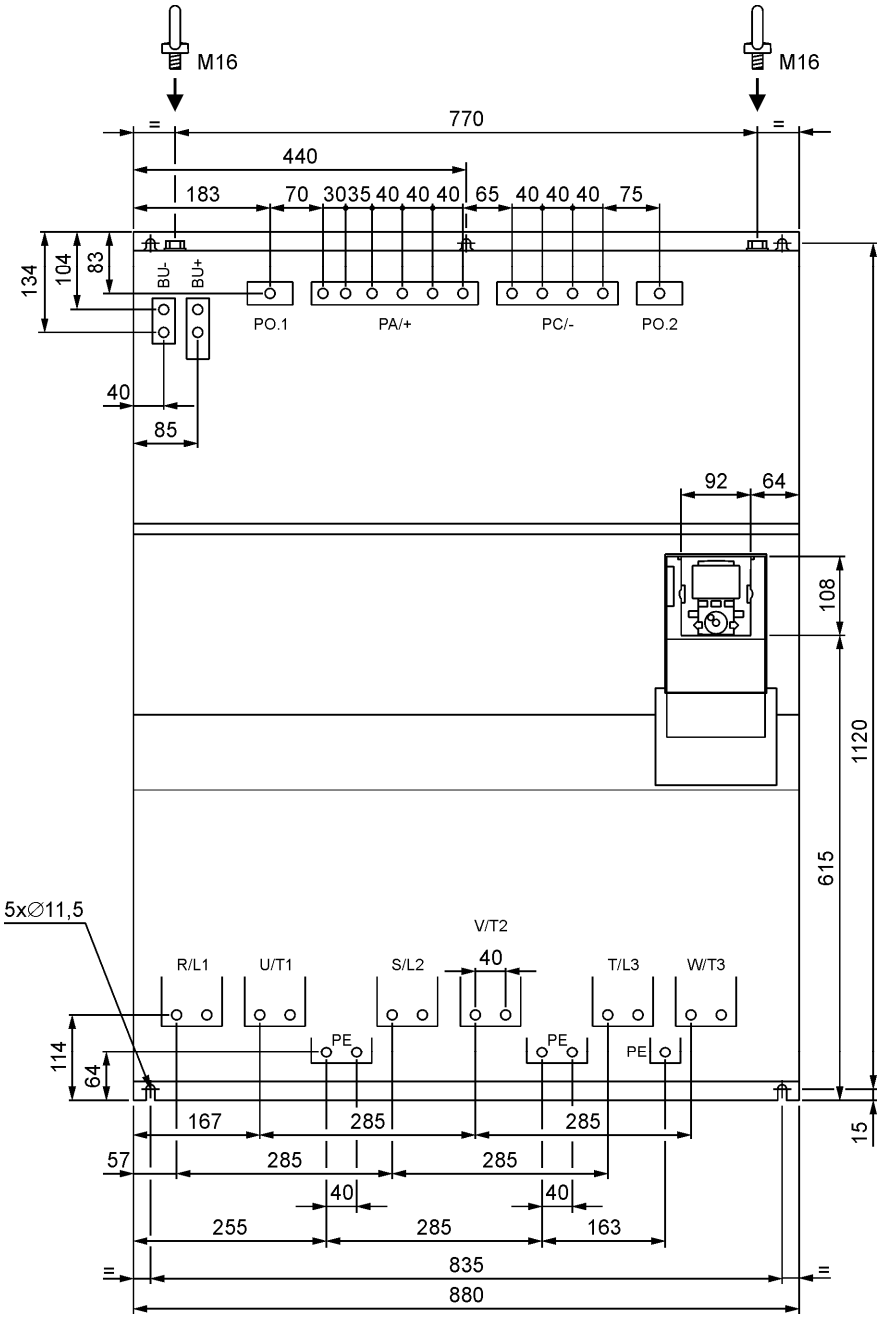

Power terminals

Designation	Connection	Tightening torque	Max. connection cross-section
PA/+ and PC/-	M12	41 Nm	8x 185 mm^2
BU+, BU-	M12	41 Nm	internal connection
Mains and motor *)	M12	41 Nm	4x 185 mm^2
PE mains and PE motor	M12	41 Nm	2x 185 mm^2

*) To improve the access to the phase V/T2 read the remark at page 70.

>pDRIVE< MX pro 4V400/500

Dimensions

with 2 option cards

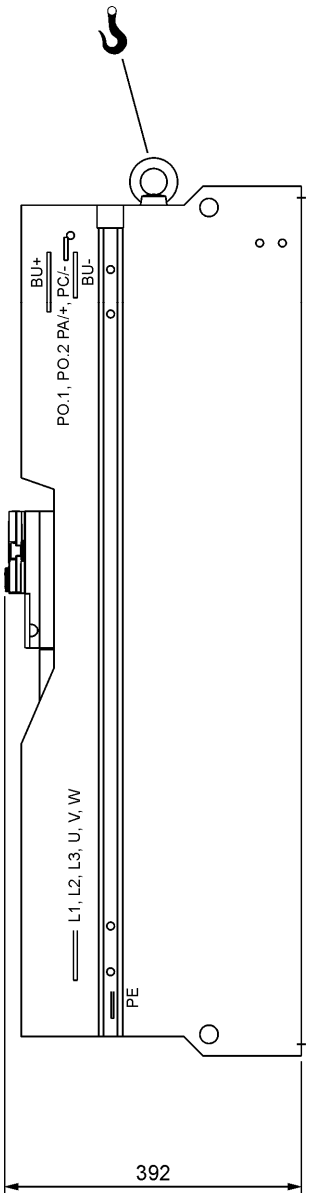

Basic device without or with 1 option card

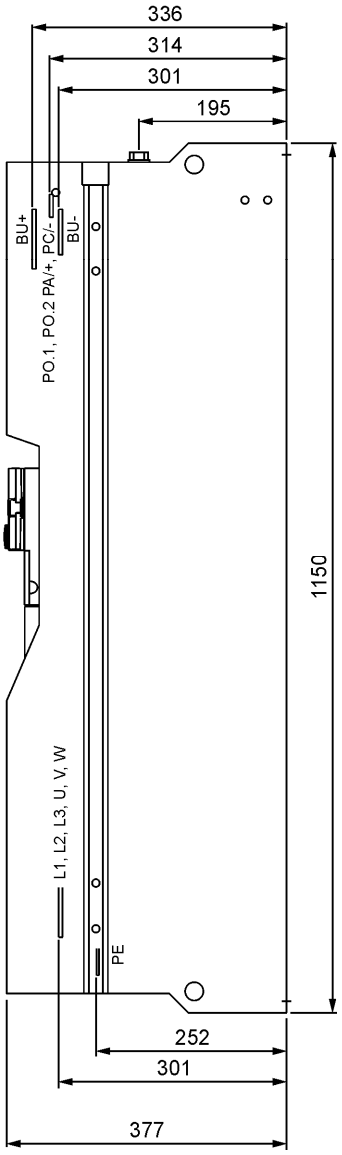

Technical data

>pDRIVE< MX pro	4V400/500
Losses at 100% I_N	8630 W / 11150 W
Volume of cooling air (IP23)	1800 m^3/h
Min. air inlet/outlet (IP23)	15 dm^2
Losses internal (incl. DCL)	930 W / 1190 W
Losses external (incl. DCL)	8360 W / 10870 W
Volume of cooling air (IP54)	500 m^3/h
Weight	225 kg

8 P01 325 EN.04/04 HMHF

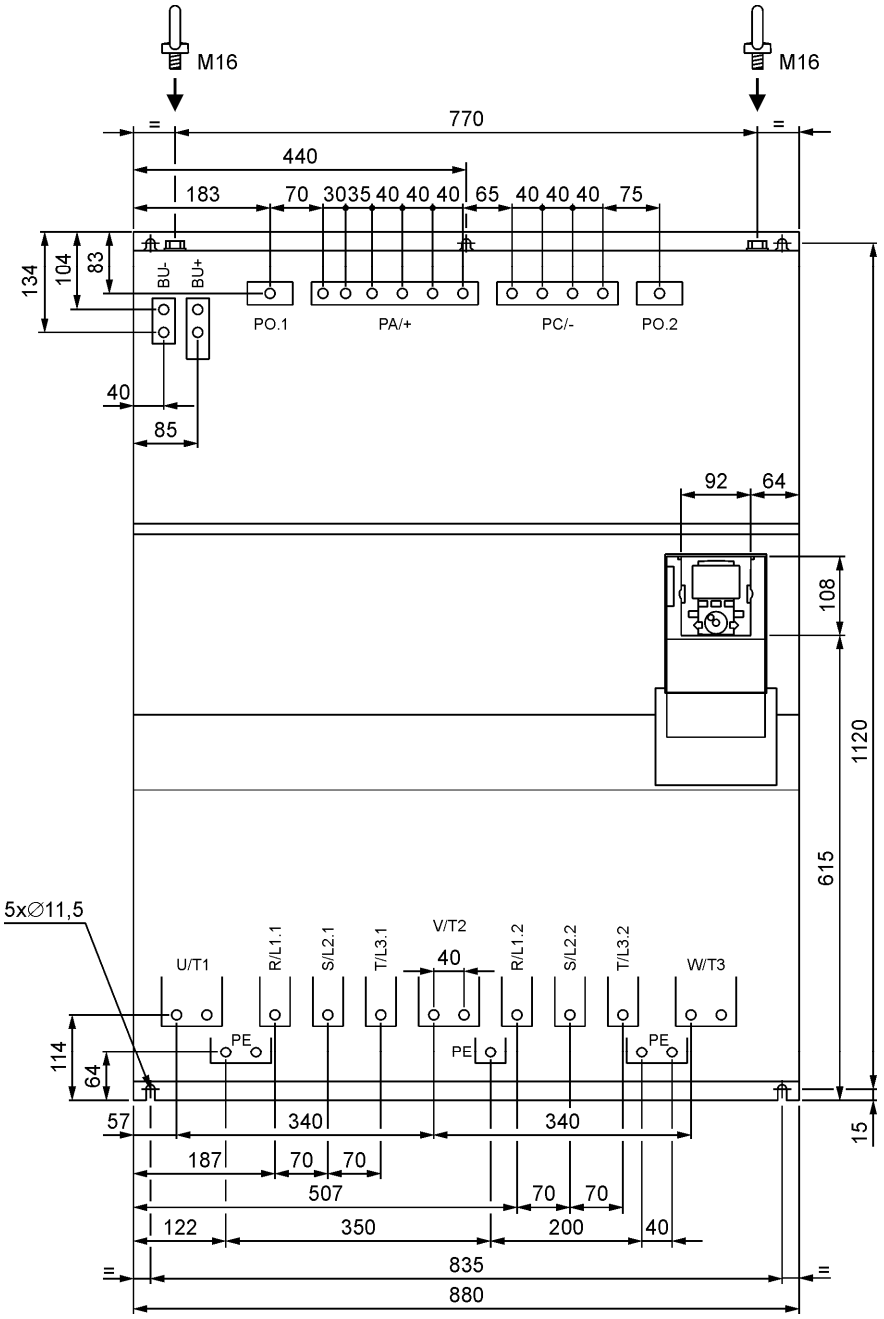

Power terminals

Designation	Connection	Tightening torque	Max. connection cross-section
PA/+ and PC/-	M12	41 Nm	8x 185 mm^2
BU+, BU-	M12	41 Nm	internal connection
Mains	M12	41 Nm	2x 2x 185 mm^2
Motor *)	M12	41 Nm	4x 185 mm^2
PE mains and PE motor	M12	41 Nm	2x 185 mm^2

*) To improve the access to the phase V/T2 read the remark at page 70.

>pDRIVE< MX pro 4V500/630

Dimensions

with 2 option cards

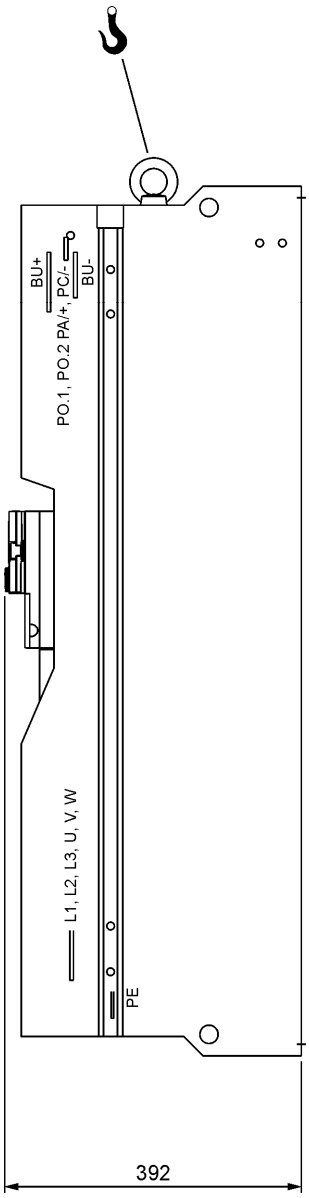

Basic device without or with 1 option card

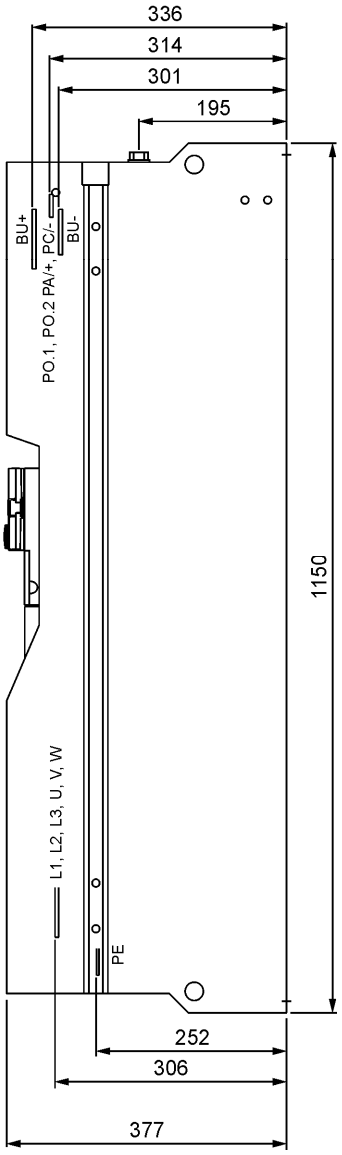

Technical data

>pDRIVE< MX pro	4V500/630
Losses at 100% I_N	10530 W / 13830 W
Volume of cooling air (IP23)	2400 m^3/h
Min. air inlet/outlet (IP23)	20 dm^2
Losses internal (incl. DCL)	1150 W / 1500 W
Losses external (incl. DCL)	10230 W / 13510 W
Volume of cooling air (IP54)	660 m^3/h
Weight	300 kg

8 P01 325 EN.04/04 HMHF

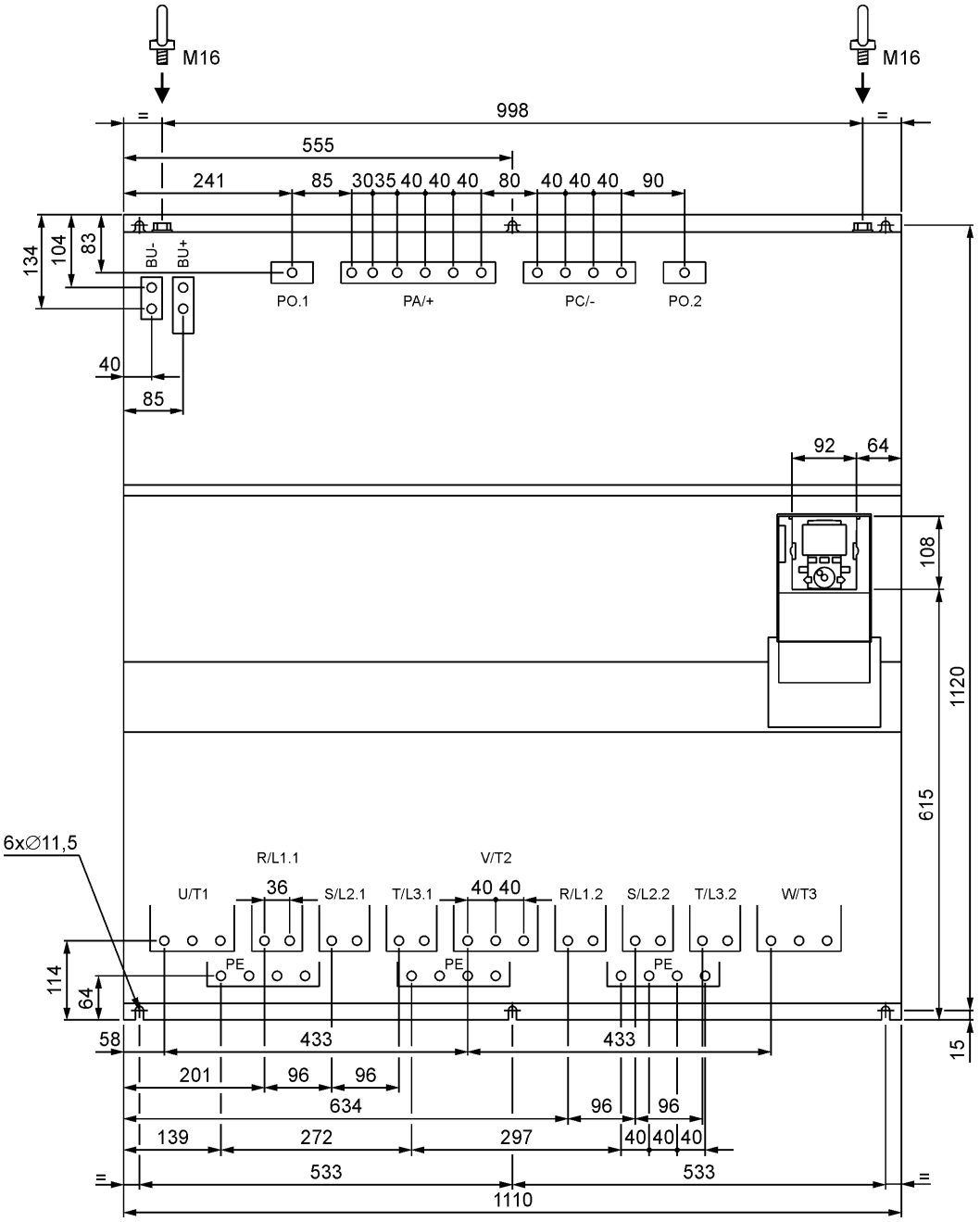

Power terminals

Designation	Connection	Tightening torque	Max. connection cross-section
PA/+ and PC/-	M12	41 Nm	8x 185 mm^2
BU+, BU-	M12	41 Nm	internal connection
Mains	M12	41 Nm	2x 4x 185 mm^2
Motor *)	M12	41 Nm	6x 185 mm^2
PE mains and PE motor	M12	41 Nm	4x 185 mm^2

*) To improve the access to the phase V/T2 read the remark at page 70.

Access to phase V/T2

Therefor unscrew the lower part of the middle front cover support.
Required tool: Torx TX30

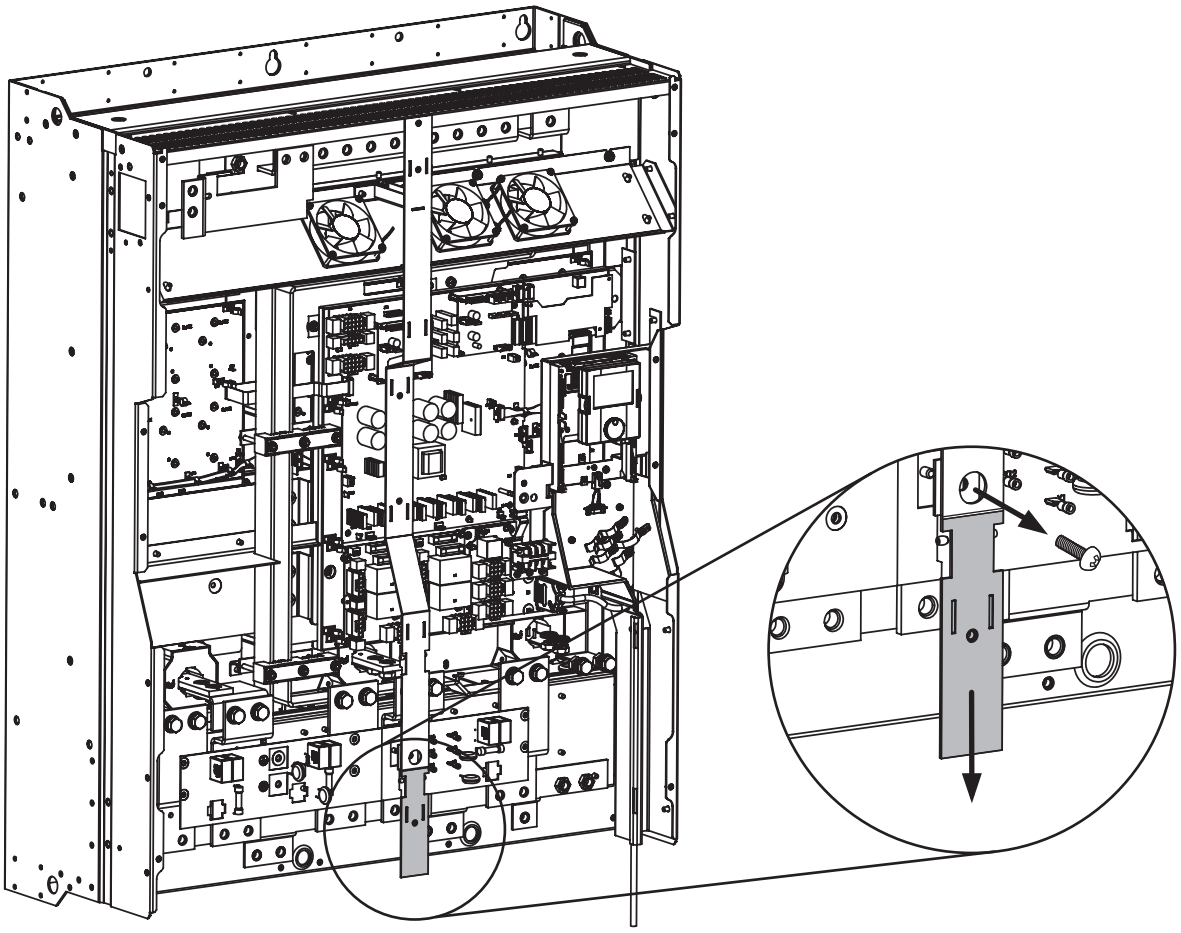

Braking unit *>pDRIVE< BU 4V420*

Dimensions

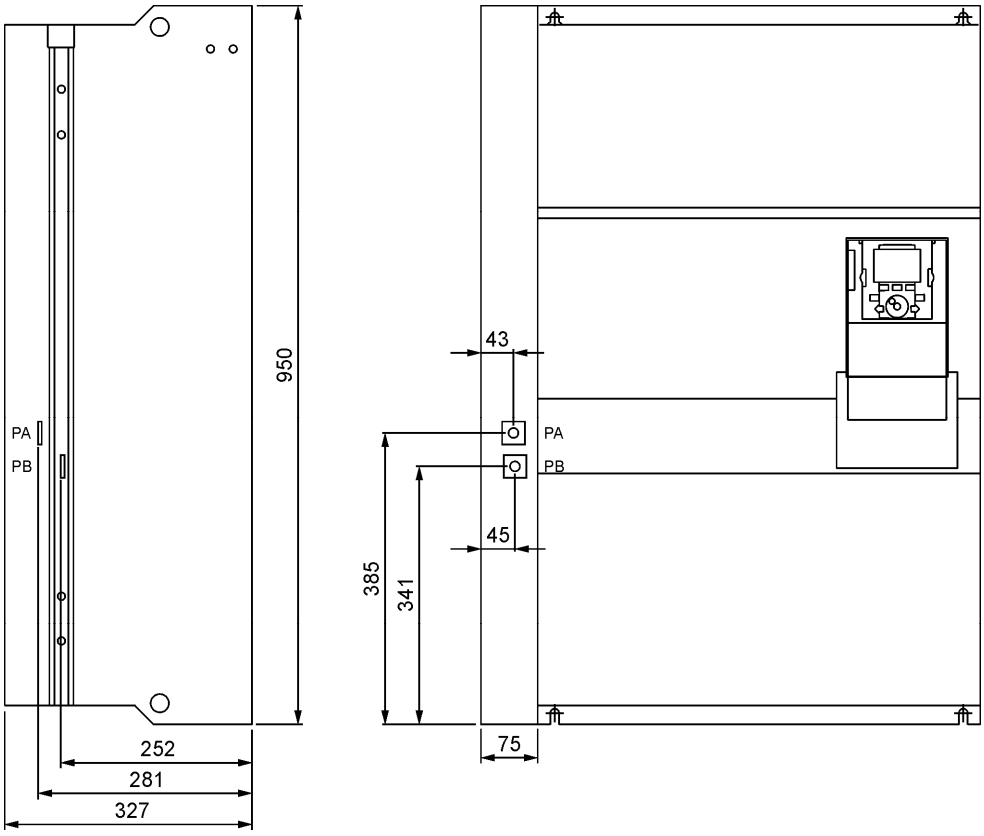

HMHF

8 P01 325 EN.04/04

Power terminals

Designation	Connection	Tightening torque	Max. connection cross-section
BU+, BU-	M10	24 Nm	internal connection
PA, PB	M10	24 Nm	2x 95 mm^2

Technical data

Braking unit	*>pDRIVE< BU 4V420*
Losses at 100% I_N	550 W
Volume of cooling air	100 m^3/h
Maximum braking power	420 kW
Max. continuous braking power	200 kW
Possible braking power depending on the duty cycle	420 kW for 5 % 320 kW for 15 % 250 kW for 50 %
Cycle time	240 s
Typ. braking power for crane operation	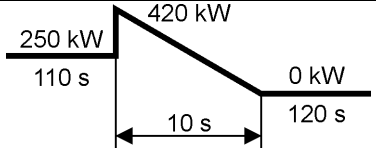
Min. braking resistance	1.05 Ω
Weight	30 kg

Installation of the BU 4V420

The braking unit is mounted on the left side of the inverter. Therefore follow these instructions:

1. Mount the inverter.
2. Remove the front cover of the inverter in accordance with the safety instructions given in this document.
3. Detach the removable part A from the left-hand side of the inverter.

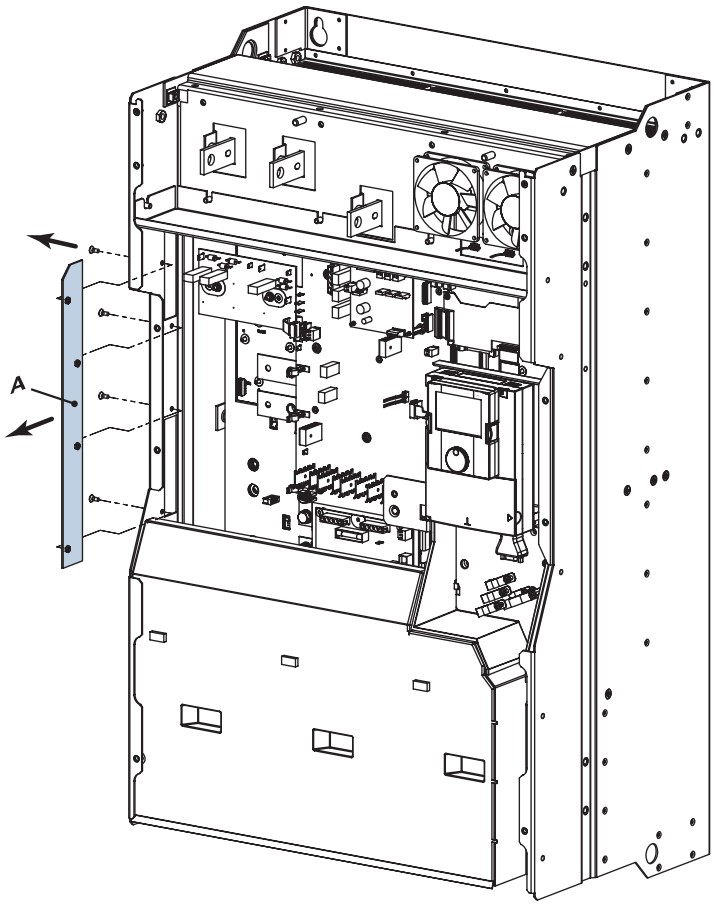

4. Mount the braking unit on the left-hand side of the inverter. There are 5 fixing points (5xM8).

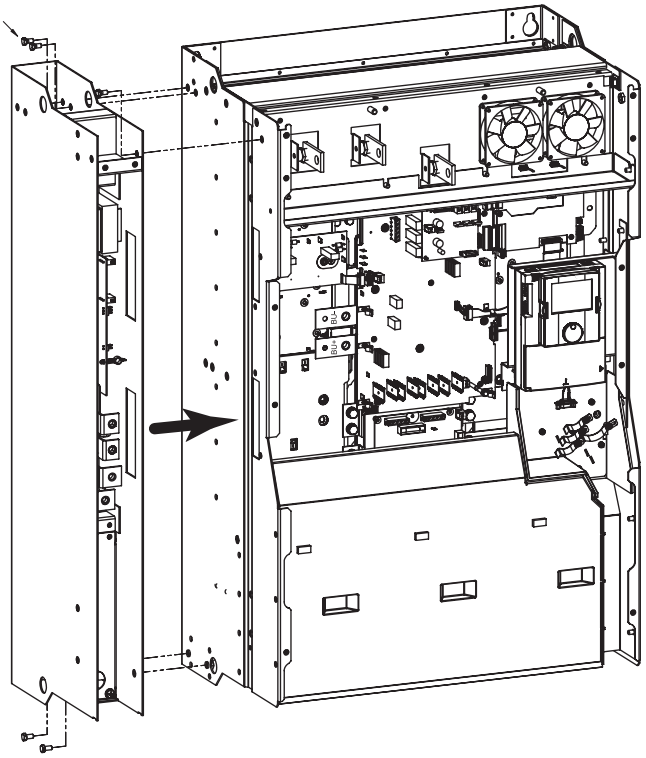

HMHF

5. Connect the busbars (B) between terminals BU- and BU+ of the inverter and terminals BU- and BU+ of the braking unit.
6. Connect the braking resistor to PA and PB.

8 P01 325 EN.04/04

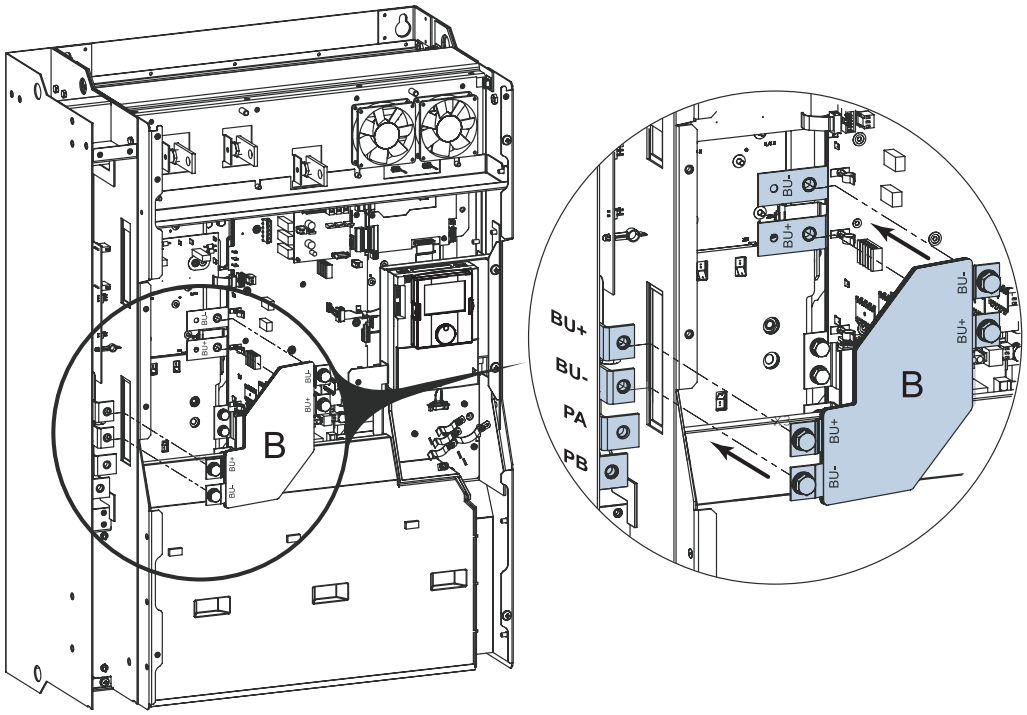

The busbar for connecting the braking unit to the >*pDRIVE*< *MX pro* (BU+, BU-) is included in delivery.

7. Connect the control cables:
   - Connect the control cable X20 of the braking unit to the cable X20 of the inverter.
   - Connect the control cable X92 of the braking unit to connector X20 of the inverter.
   - Disconnect cable X3 of the inverter from connector X3 on the inverter card.
   - Connect cable X3 of the inverter to cable X3B of the braking unit.
   - Connect cable X3A of the braking unit to connector X3 on the inverter card.

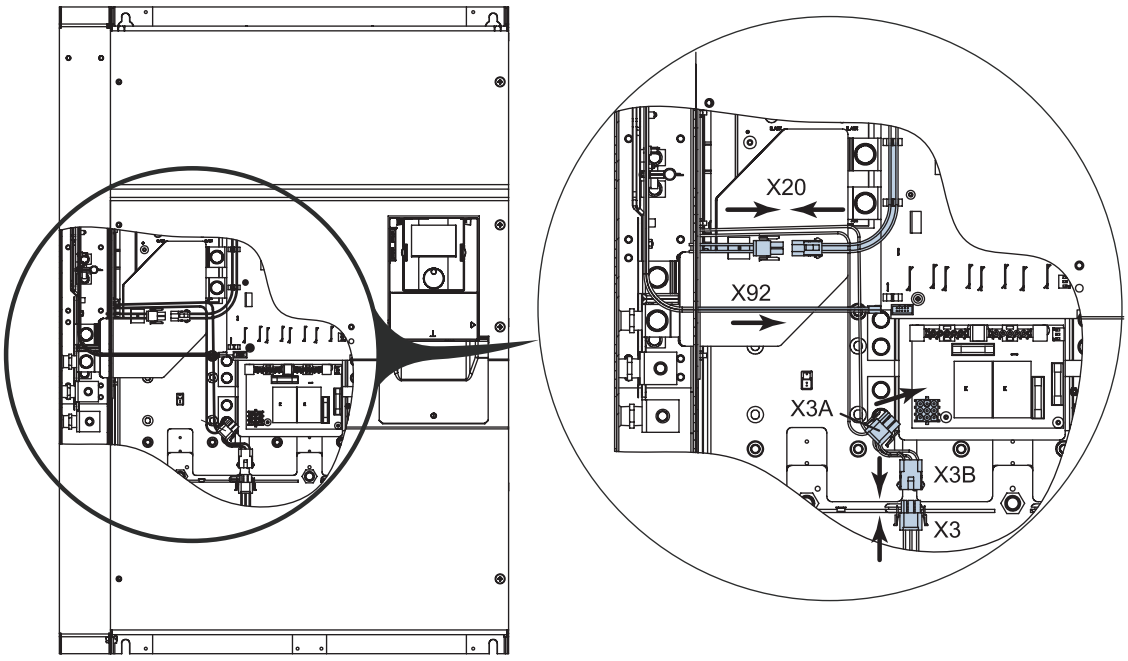

8. Mount the box of the DC choke (C) onto the wall of the cubicle. See chapter "DC choke DCL", page 93.
9. Detach the removable part (D) from the box of the DC choke.
10. Mount the cover of the braking unit (E) on the box of the DC choke.
11. Install the DC choke(s) of the inverter. See chapter "DC choke DCL", page 93.

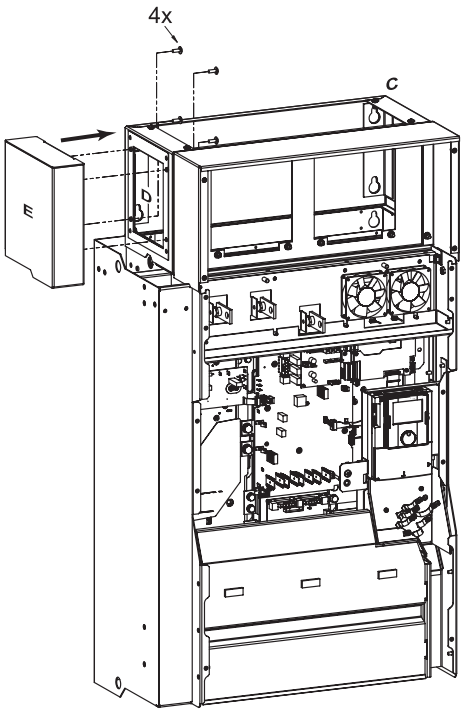

Braking unit *>pDRIVE< BU 4V750*

Dimensions

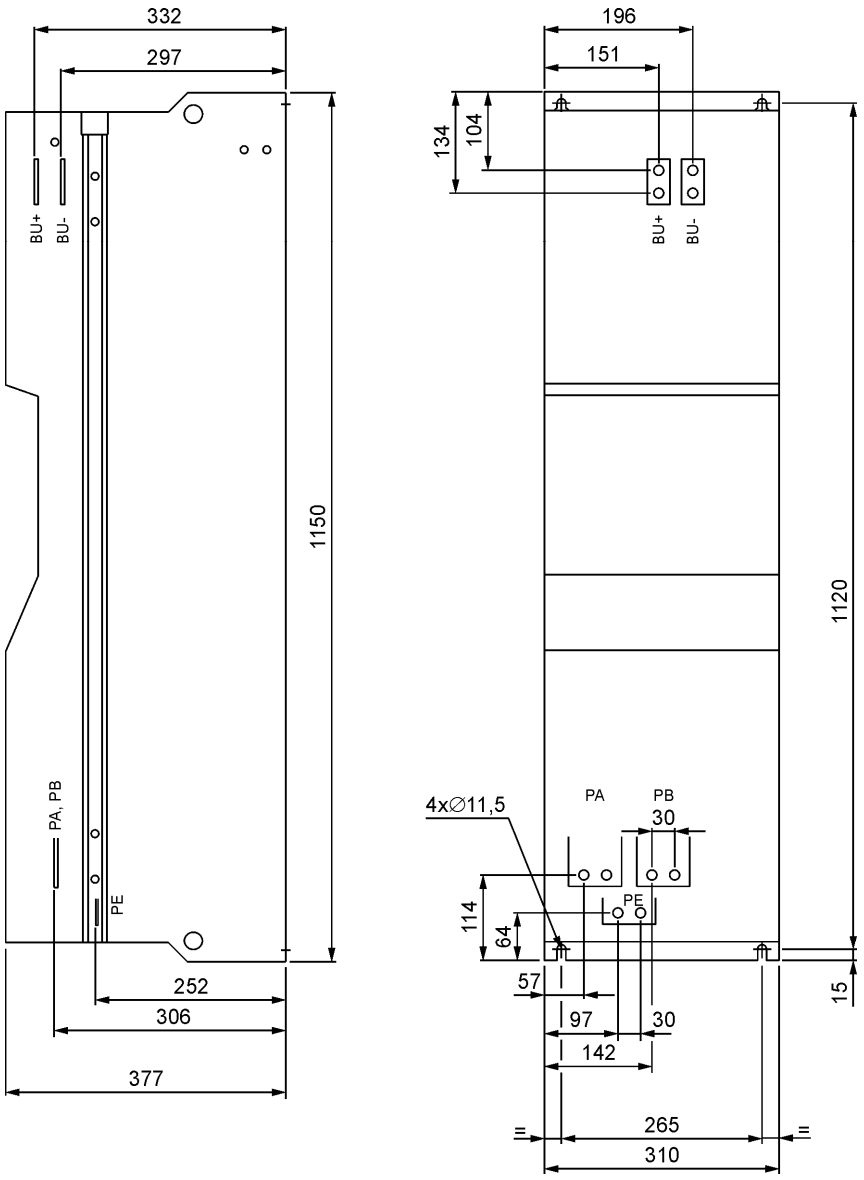

HMHF

8 P01 325 EN.04/04

Power terminals

Designation	Connection	Tightening torque	Max. connection cross-section
BU+, BU-	M12	41 Nm	internal connection
PA, PB	M12	41 Nm	4x 185 mm^2
PE	M12	41 Nm	2x 185 mm^2

The flexible bars for connecting the braking unit to the *>pDRIVE< MX pro* (BU+, BU-) are included in delivery. They are designed for a mounting distance of 110 mm. This distance must not exceed 1 m.

The distance between the bars must not exceed 10 mm!

Technical data

Braking unit	*>pDRIVE< BU 4V750*
Losses at 100% I_N	1050 W
Volume of cooling air	600 m^3/h
Maximum braking power	750 kW
Max. continuous braking power	400 kW
Possible braking power depending on the duty cycle	750 kW for 5 % 550 kW for 15 % 440 kW for 50 %
Cycle time	240 s
Typ. braking power for crane operation	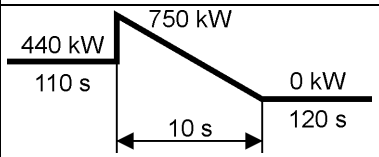
Min. braking resistance	0.7 Ω
Weight	70 kg

HMHF

8 P01 325 EN.04/04

Installation of the BU 4V750

The braking unit is mounted on the left side of the inverter in a distance of 110 mm (±5 mm). This distance results from the busbars which are included in delivery of the braking unit. When using own busbars (5 x 63 x 1 mm) it is possible to increase the distance up to one meter.

The distance between the flexible busbars of the power part BU+ and BU- must not exceed 10 mm!

1. Mount the inverter and the braking unit.
2. Remove the front cover of the inverter in accordance with the safety instructions.
3. Detach the removable part A which is inside the inverter.
4. Connect the terminals BU- and BU+ of the inverter to the terminals BU- and BU+ of the braking unit using the busbars B.

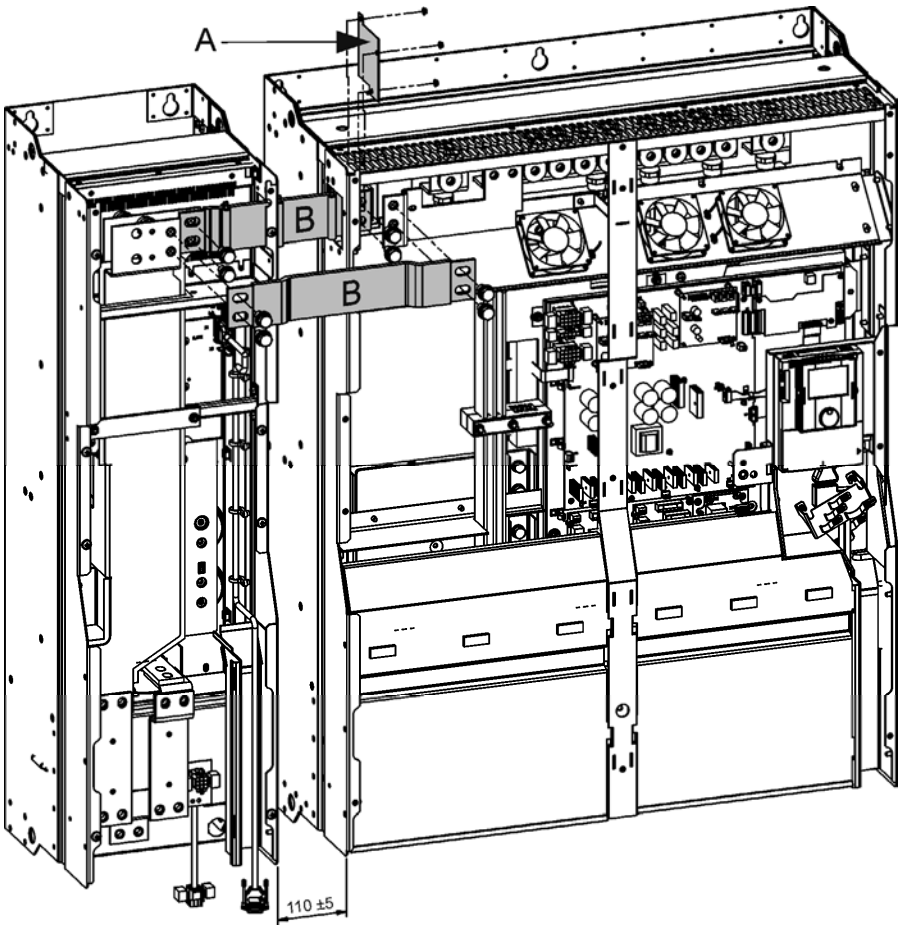

5. Connect the control cables and the power supply of the fan:
   - Connect control cable X1 of the braking unit to connector X1 of the inverter.
   - Connect the cables of the braking unit for the power supply of the fan to connector X2 of the inverter.

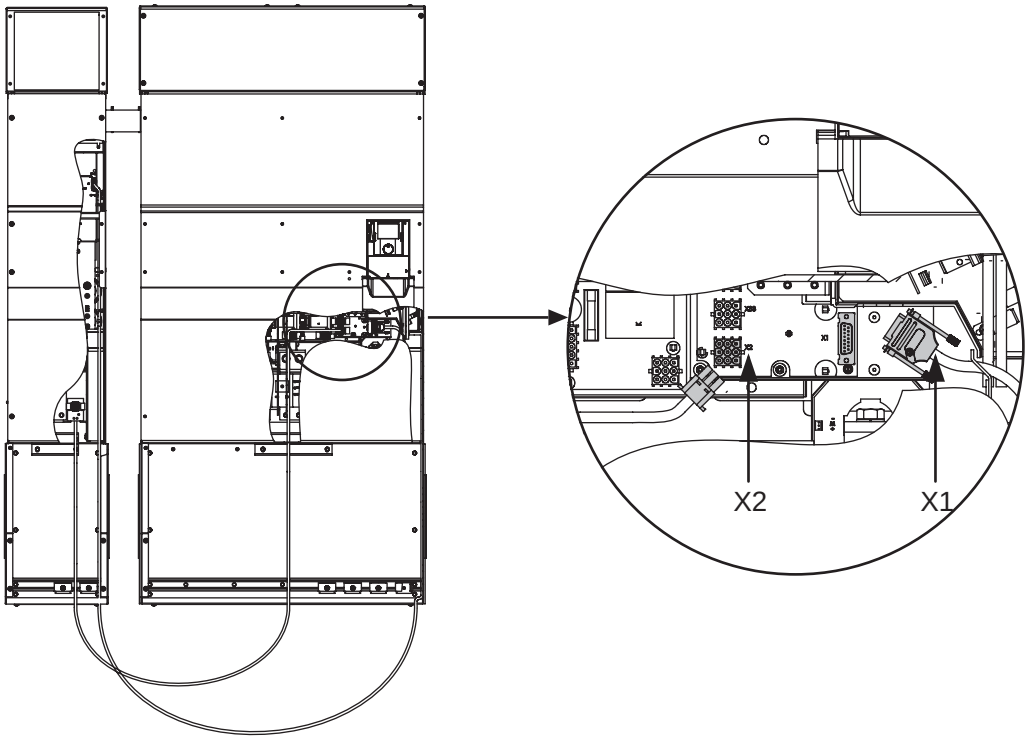

Distances to other devices or to the wall

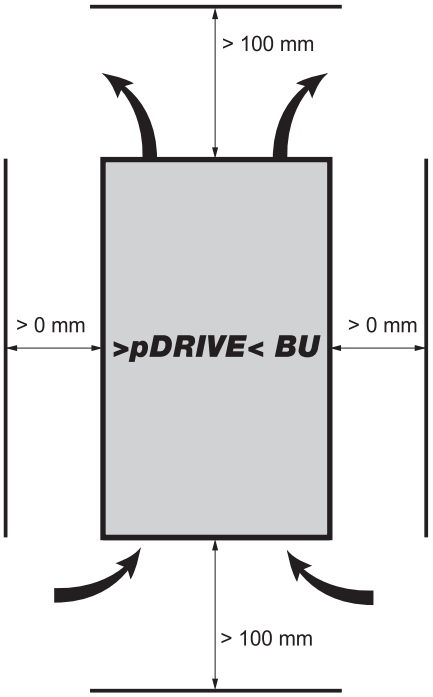

Options

Operating options

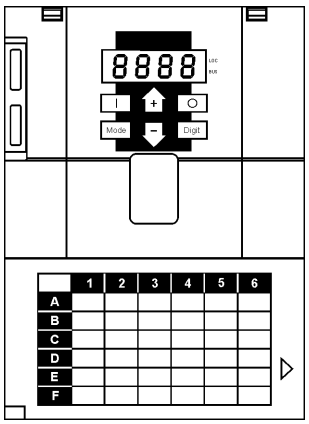

The *>pDRIVE< MX pro* frequency inverters include a four-digit, seven-segment LED display as standard which can be used to operate and parameterize the inverter.

This integrated keypad is sufficient to obtain queries and adjustments of single parameters whereas not all special functions can be used. Also the adjustment without instructions is not possible because of the unavailable parameter texts.

By means of the integrated buttons the inverter can be operated in panel mode.

For expanded operation, several interfaces are available on the frequency inverter:

RJ45 interface on the front can be used for:

- Matrix operating panel BE11 - can be plugged in directly
  or
- Matrix operating panel BE11 in the door mounting kit DMK11
  (connected via the connecting cable CABLE 3-BE or CABLE 10-BE)
  or
- Matrix 3 PC program (via connecting cable CABLE 3-PC)

RJ45 interface next to control terminals can be used for:

- Matrix operating panel BE11 in the door mounting kit DMK11 [1)]
  (connected via the connecting cable CABLE 3-BE or CABLE 10-BE)
  or
- Matrix 3 PC program (via connecting cable CABLE 3-PC) [1)]
  or
- Matrix 3 PC program (via Bluetooth adapter)
  or
- Matrix 3 PC program (for several inverters via the Modbus interface converter)
  or
- Matrix 3 PC program (remote maintenance for several inverters by means of matrix remote link by modem or Ethernet connection)
  or
- MODBUS fieldbus
  or
- CANopen fieldbus (ADAP-CAN adapter required)

[1)] The parameters in matrix field D6 for adjusting the Modbus must be set to the factory setting !

HMHF
8 P01 325 EN.04/04

Door mounting kit DMK11

The door mounting kit *>pDRIVE< DMK11* enables the installation of the matrix operating panel BE11 in the cubicle door (protection degree IP54). It guarantees safe operation of the inverter with closed cubicle door and separates the position of the inverter in the cubicle from the optimal height for handling.

An additional "IP65 transparent cover" protects the made device settings against unintentional modifications whereas the operating state can be still read off.

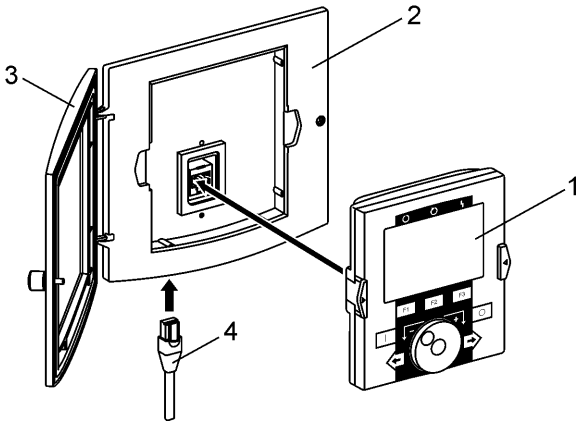

1 Option matrix operating panel *>pDRIVE< BE 11*

2 Door mounting kit
Designation: Option *>pDRIVE< DMK11*
Order number: 8 P01 120

3 IP65 transparent cover
Designation: Option *>pDRIVE< DMK11-IP65*
Order number: 8 P01 121

4 Connecting cable operating panel – inverter

3 m length:
Designation: Option *>pDRIVE< CABLE3-BE*
Order number: 8 P01 122

10 m length:
Designation: Option *>pDRIVE< CABLE10-BE*
Order number: 8 P01 123

HMHF

Dimensions in mm

Door mounting kit DMK11

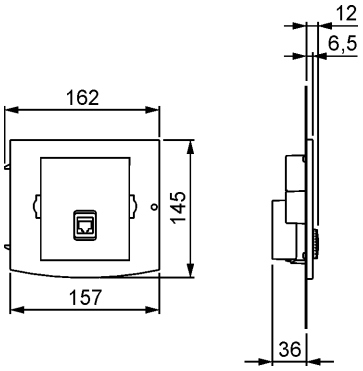

IP65 transparent cover DMK11-IP65

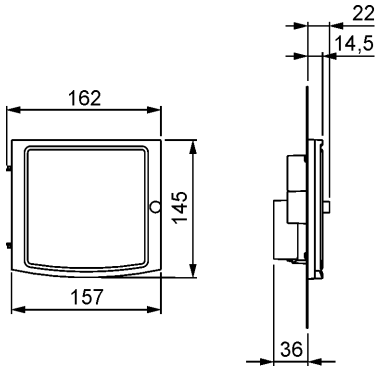

Drilling plan

117 x 107 mm cut-out

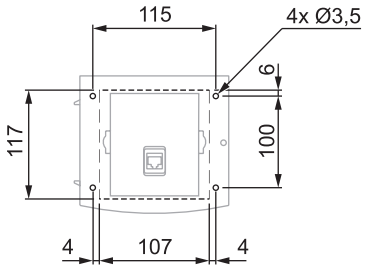

Thickness of sheet metal:
1.5...3 mm

8 P01 325 EN.04/04

The connecting cable for the door mounting kit DMK11 can be connected to the front of the inverter or to RJ45 plug next to the terminals, alternatively. In this case, the parameters in matrix field D6 for adjusting the Modbus must be set to the factory setting.

Control terminals

Access to the control terminals

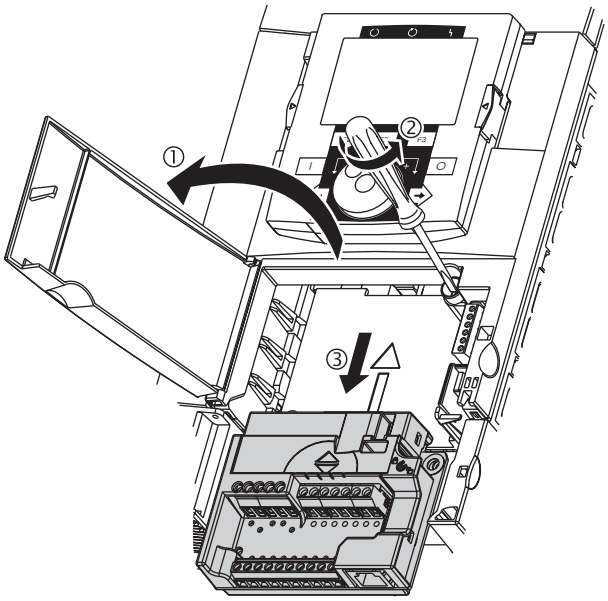

Open the control trap (①) to get access to the control terminals.

In order to simplify the wiring of the control part of the inverter it is possible to pull out the control terminal board.

Unscrew the screw until the spring is expanded (②). Pull out the option card (③) by pushing it downwards.

HMHF

After reassembling the control terminal board tighten the captive screw.

Non-observance of this precautions may cause material damage.

Control options

Fieldbus Modbus

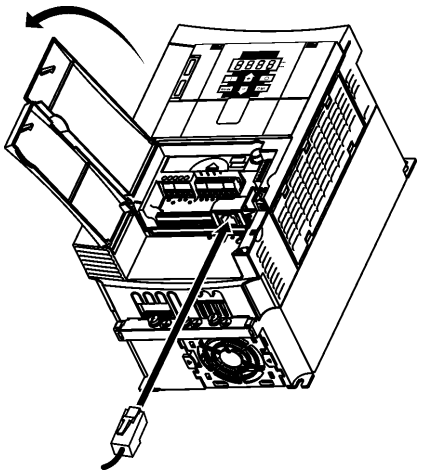

The frequency inverters >*pDRIVE*< *MX pro* are equipped with a Modbus interface to control and monitor the drive as standard.

Technical data:

- Max. 247 subscribers in all segments
- Max. 32 subscribers including repeater per segment
- Max. 1000 m line length at 19.2 kBaud
- Bus cable: screened, 2 x twisted, two-wire line (typ. Cat5)
- Bus termination: serial connection of R = 120 Ω and C = 1 nF for each bus segment
- RJ45 port: screened, pin assignment 4, 5, 8
- No galvanic isolation

The Modbus interface cannot be used at the same time as the ADAP-CAN option!

More information on the Modbus network and a precise description of the Modbus parameters can be found in the Modbus operating instructions.

HMHF

8 P01 325 EN.04/04

Example for a Modbus network:

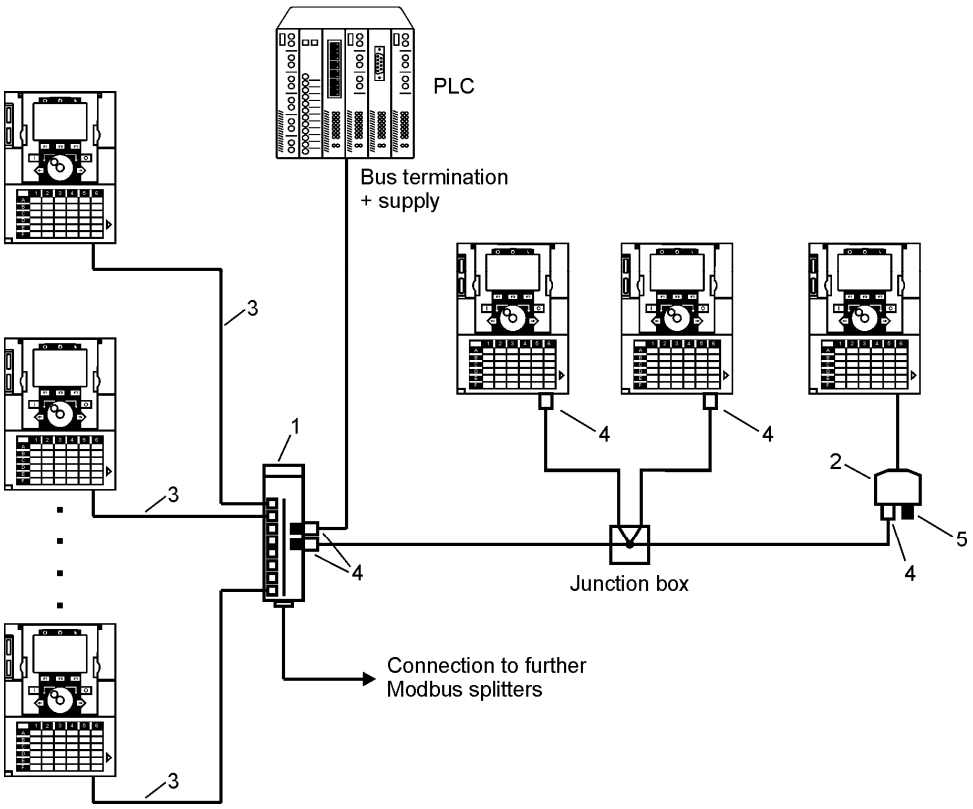

HMHF

Required components:

No.	Designation	Description
1	Option >*pDRIVE< MODBUS SPLITTER* Order number: 8 P01 303	Divides the Modbus signal into eight additional channels using a star configuration. Several Modbus splitters can be connected parallel. Suited for mounting on a top-hat rail.
2	Option >*pDRIVE< MODBUS T-ADAP 03* Order number: 8 P01 300	Modbus T-adapter with 0.3 m connecting cable
	Option >*pDRIVE< MODBUS T-ADAP 10* Order number: 8 P01 301	Modbus T-adapter with 1 m connecting cable
3	Option >*pDRIVE< CABLE 3-BE* Order number: 8 P01 122	Pre-assembled RJ45 connecting cable 3 m
	Option >*pDRIVE< CABLE 10-BE* Order number: 8 P01 123	Pre-assembled RJ45 connecting cable 10 m
4	Option >*pDRIVE< MODBUS PLUG* Order number: 8 P01 305	RJ45 connector IP20 with quick-connecting technology
5	Option >*pDRIVE< MODBUS RC* Order number: 8 P01 302	Bus termination RC

Further recommended Modbus components

Cable LAPPKABEL, UNITRONIC® BUS FD P LD, 2x2 x0.22

Fieldbus adapter ADAP-CAN for CANopen

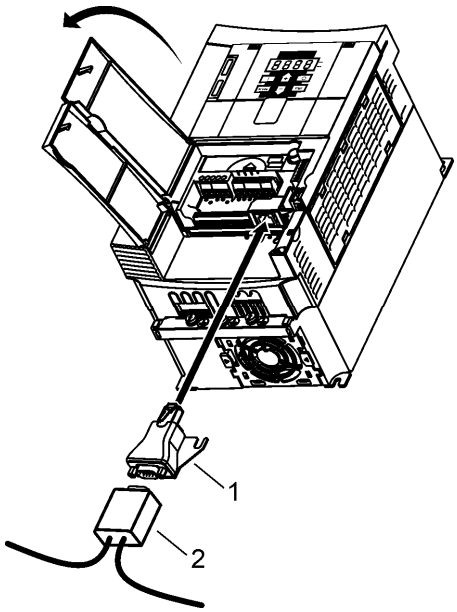

All >*pDRIVE*< *MX pro* frequency inverters support the CANopen fieldbus system as standard. For the integration of the CANopen-typical Sub-D fieldbus connection, an optional CANopen adapter must be installed at the RJ45 interface next to the terminals of the inverter.

In the CANopen network the frequency inverter is operated as a slave. The used profile is designed on the basis of the Profidrive profile VDI/VDE 3689.

1 CANopen adapter
Designation: Option >*pDRIVE*< *ADAP CAN*
Order number: 8 P01 125

2 CANopen plug
Designation: Option >*pDRIVE*< *CANOPEN PLUG*
Order number: 8 P01 307

Technical data:

- Max. 32...126 subscribers (according to the CAN controller used)
- Bus cable: screened, twisted two-wire line
- Bus terminating resistor: R = 120 Ω (108…132 Ω)
- SUB-D port according to ISO 11898
- CAN interface according to CiA DS 102
- No galvanic isolation

The ADAP-CAN option cannot be used at the same time as the Modbus interface!

More information on the CANopen network and a precise description of the CANopen parameters can be found in the CANopen operating instructions.

HMHF
8 P01 325 EN.04/04

Installing of an option card

Installing of the option card into the *>pDRIVE< MX pro* frequency inverter is finished after a few steps.

Only install the option card when there is no voltage on the inverter. Non-observance leads to destruction of the card.

1. Remove the Matrix operating panel BE11 from the front side of the device.

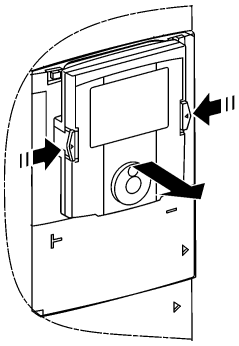

2. Remove the front cover of the device by releasing both mechanical interlocks.

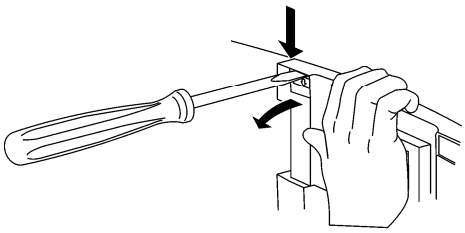

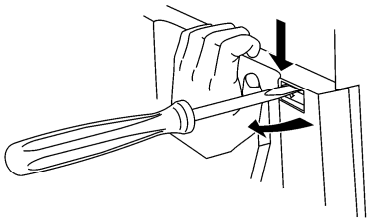

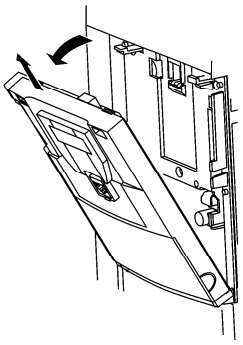

3. Mount the option card.

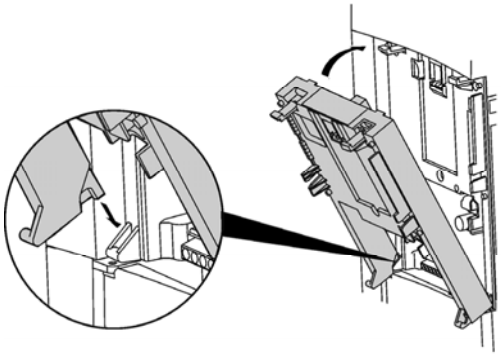

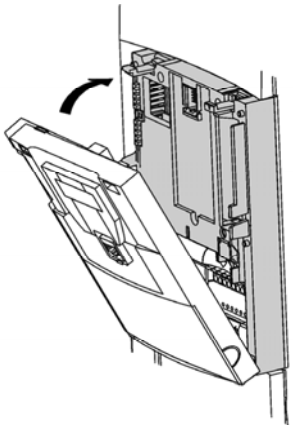

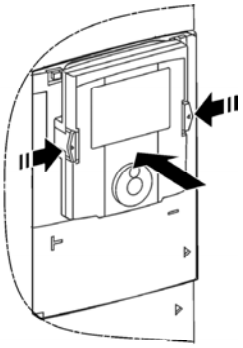

Fieldbus card PBO11 for Profibus DP

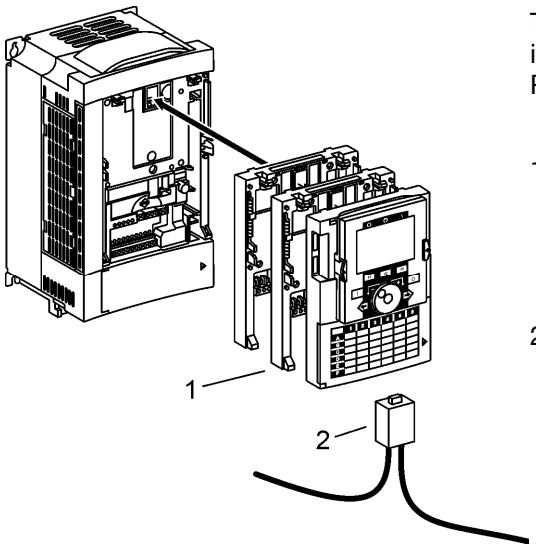

The option card >*pDRIVE*< *PBO11* is completely provided by the inverter software and works as DP slave according to the PROFIDRIVE specification.

1 Profibus option card
Designation: Option >*pDRIVE*< *PBO11*
Order number: 8 P01 103

2 Profibus plug (straight) with switchable terminating resistor
Designation: Option >*pDRIVE*< *PROFIBUS PLUG*
Order number 8 P01 306

Technical data:

- Address 1 to 126, adjustable via switch
- max. 126 subscribers (32 per segment)
- 9.6 / 19.2 / 93.75 kBit/s baud rate at max. 1200 m cable length (cable type A, 0.34 mm^2)
- 187.5 kBit/s baud rate at max. 1000 m cable length (cable type A, 0.34 mm^2)
- 500 kBit/s baud rate at max. 400 m cable length (cable type A, 0.34 mm^2)
- 1.5 MBit/s baud rate at max. 200 m cable length (cable type A, 0.34 mm^2)
- 3 / 6 / 12 MBit/s baud rate at max. 100 m cable length
- RS 485 interface according to EN 50170
- Configuration file: MXPB1101.GSD
  The file is provided on the CD-ROM which is attached to each inverter as well as on our homepage www.pdrive.com for free download.
- PBO types 1 to 5
- Diagnostic LED's: 2 (state and data exchange)

Because this option is plugged at the front side of the inverter, it affects the total depth of the device (see chapter "Dimensions", page 51).

The inverters >*pDRIVE*< *MX pro* can be equipped at most with 2 option cards (terminal extension and/or field bus).

In order to address an inverter via fieldbus also during mains cut-off (line contactor control, disconnecting switch, ...) the >*pDRIVE*< *MX pro* has to be supplied with an external 24 V buffer voltage.

More information on the Profibus network and a precise description of the Profibus parameters can be found in the Profibus operating instructions.

HMHF
8 P01 325 EN.04/04

Terminal extension IO11 and IO12

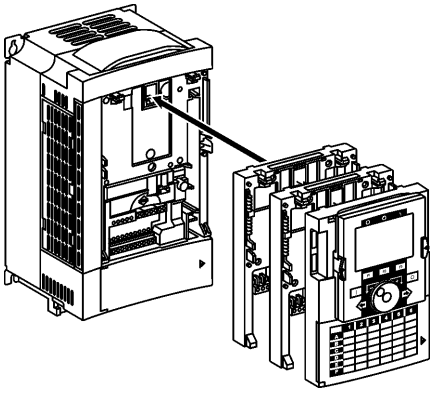

The frequency inverters >*pDRIVE*< *MX pro* are equipped with extensive control terminals as standard. The use and the function of all inputs and outputs can be parameterized.

For extension the option cards >*pDRIVE*< *IO11* and >*pDRIVE*< *IO12* are available. Both option card can be installed, but the same card cannot be plugged twice

Designation: Option >*pDRIVE*< *IO11*
Order number: 8 P01 101

Designation: Option >*pDRIVE*< *IO12*
Order number: 8 P01 102

Listing of all control terminals

Control terminals		Standard equip-ment	Option >*pDRIVE*< *IO11*	Option >*pDRIVE*< *IO12*	Max. equip-ment
Reference voltages	+10 V	x	–	–	x
	-10 V	–	x	x	x
	+24 V	x	x	x	x
Ext. buffer voltage	24 V DC	x	–	–	x
Inputs					
Analog inputs (limits and usage can be parameterized)	0...±10 V (differential)	1x	–	–	1x
	0(4)...20 mA (differential)	–	–	1x	1x
	alternatively 0...+10 V or 0(4)...20 mA	1x	–	1x	2x
Digital inputs (function can be parameterized)	DI (24 V, positive / negative logic)	5x	4x	4x	13x
	alternatively DI or thermistor	1x	–	–	1x
Thermistor inputs	Thermistor	–	1x	1x	2x
	alternatively DI or thermistor	1x	–	–	1x
Safety input	"Safe Standstill"	1x	–	–	1x
Digital ref. value	0...30 kHz	–	–	1x	1x
Outputs					
Analog outputs (selection of actual values can be parameterized)	alternatively 0...+10 V or 0(4)...20 mA	1x	–	–	1x
	alternatively ±10 V or 0(4)...20 mA	–	–	2x	2x
Digital outputs (function can be parameterized)	Open Collector 24 V DC	–	2x	2x	4x
Relay outputs (function can be parameterized)	N.O./N.C.	1x	1x	1x	3x
	N.O.	1x	–	–	1x

Because this option is plugged at the front side of the inverter, it affects the total depth of the device (see chapter "Dimensions", page 51).

The inverters >*pDRIVE*< *MX pro* can be equipped at most with 2 option cards (terminal extension and/or field bus).

Speed feedback SFB

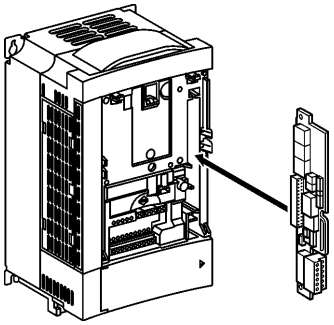

The option SFB "speed feedback" can be used for exact speed indication and prevention of a breakdown at 0 Hz or alternatively for exact speed control. This option is only available for the *>pDRIVE< MX pro*!

There are three different options are available:

Designation: *Option >pDRIVE< SFB 5V RS422*
Order number: 8 P01 110

Designation: *Option >pDRIVE< SFB 15V RS422*
Order number: 8 P01 111

Designation: *Option >pDRIVE< SFB 24V PP*
Order number: 8 P01 112

Specification >pDRIVE< SFB 5V RS422

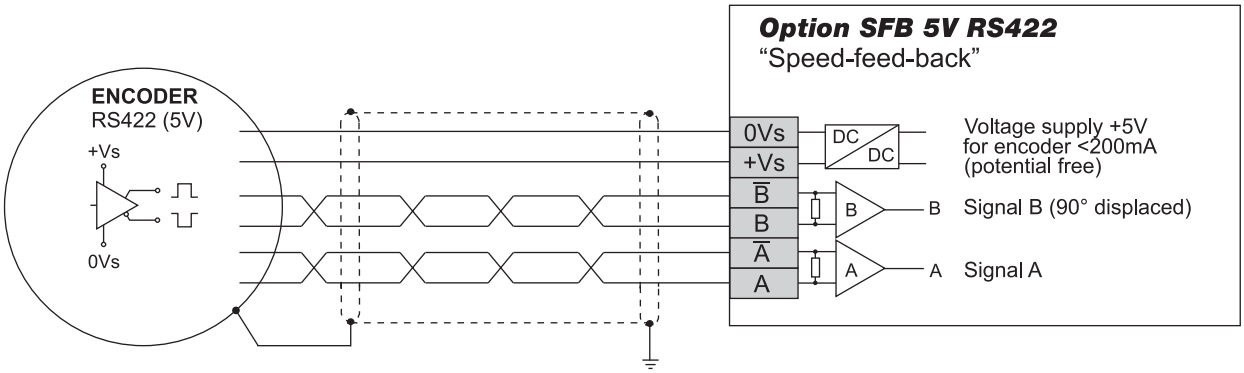

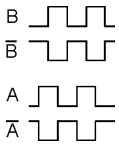

Recommended minimum cable cross section:

up to 25 m: 0.5 mm²
up to 50 m: 0.75 mm²
up to 100 m: 1.5 mm²

Terminal	Designation	Specification
0Vs +Vs	Voltage supply of the encoder	max. 200 mA at 5 V DC (max. 5.5 V), protected against short-circuit and overload
$\overline{B}$ B	Incremental logic inputs (90° displaced to signal A)	Max. 5,000 pulses / rotation Min. 100 pulses / rotation
$\overline{A}$ A	Incremental logic inputs	Max. 300 kHz

HMHF
8 P01 325 EN.04/04

Specification >*pDRIVE*< *SFB 15V RS422*

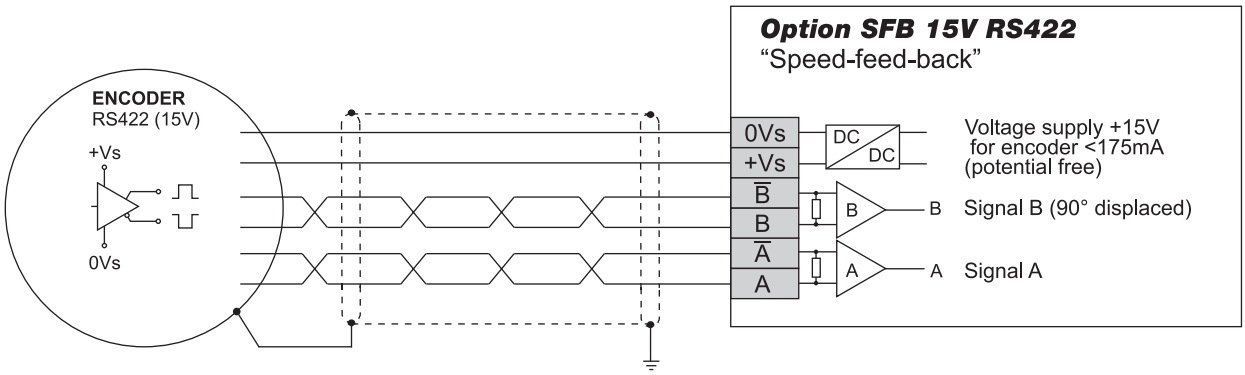

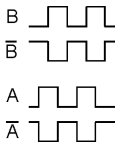

Recommended minimum cable cross section:

up to 25 m: 0.2 mm²
up to 100 m: 0.5 mm²
up to 600 m: 1.0 mm²

Terminal	Designation	Specification
0Vs +Vs	Voltage supply of the encoder	max. 175 mA at 15 V DC (max. 16 V), protected against short-circuit and overload
B̄ B	Incremental logic inputs (90° displaced to signal A)	Max. 5,000 pulses / rotation Min. 100 pulses / rotation Max. 300 kHz
Ā A	Incremental logic inputs	

HMHF

Specification >*pDRIVE*< *SFB 24V PP*

8 P01 325 EN.04/04

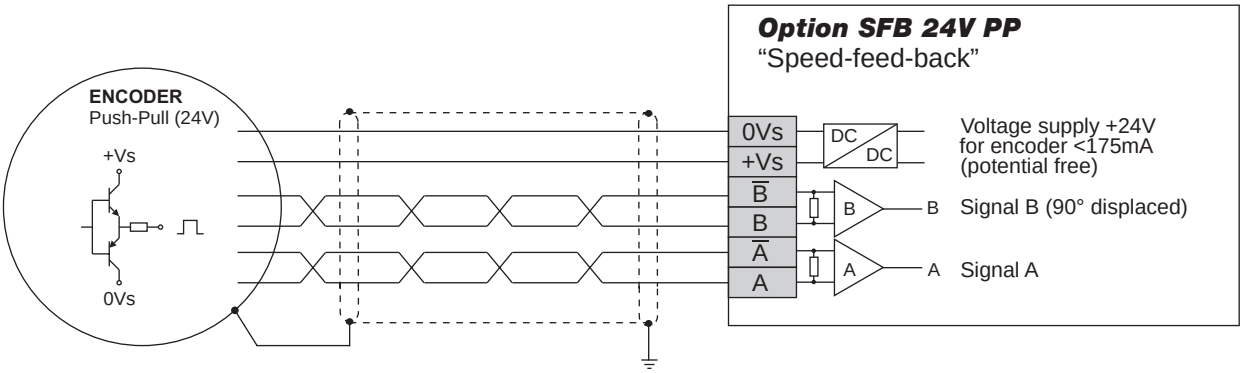

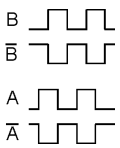

Recommended minimum cable cross section:

up to 600 m: 0.2 mm²

Terminal	Designation	Specification
0Vs +Vs	Voltage supply of the encoder	max. 175 mA at 24 V DC (max. 25 V), protected against short-circuit and overload
B̄ B	Incremental logic inputs (90° displaced to signal A)	Max. 5,000 pulses / rotation Min. 100 pulses / rotation Max. 300 kHz
Ā A	Incremental logic inputs	State 0 if < 1.5 V State 1 if > 11.5 and < 25 V

External options

Radio frequency interference filter RFI

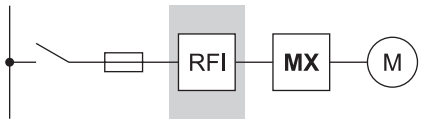

The *>pDRIVE< MX* frequency inverters include a radio frequency interference filter for use in industrial environments which is built-in as standard.

For *>pDRIVE< MX eco* 4V and *pro* 4V this filter complies with the specifications of category C2 "Use in residential environments" according to EN 61800-3 for *>pDRIVE< MX eco & pro* 4V0,75...4V4,0 and category C3 "Use in industrial environments" for all inverters from 5.5 kW.

For applications in "1st environment - residential environments" of category C1 or C2 and in case of long motor cables the use of the additional filters option *>pDRIVE< RFI* is required. These filters are connected at the mains side of the inverter.

For all *>pDRIVE< MX pro* 6V this filter complies with the specifications of category C3 "Use in industrial environments".

The determining factor for the radio frequency interference filters to be effective is a HF connection as good as possible between motor, motor cable screen and filter !

The filters *>pDRIVE< RFI* are not qualified for nongrounded (IT) mains as well as for "Corner Grounded Networks".

The radio frequency interference filters which are built-in as standard can be switched-over/reconnected for use in IT mains.

	General technical data
Operating voltage RFI 480	3AC 380 V -15 % ... 480 V +10 %
Operating voltage RFI 6V	3AC 500 V -15 % ... 690 V +10 %
Nominal frequency	50/60 Hz ±5 %
Overload capability	150 % for 60 s per 10 min, 200 % for 2 s
Ambient temperature	-10...+50 °C (up to 60 °C with derating)
Storage temperature	-40...+70 °C
Altitude	0...1000 m (up to 3000 m with derating, but max. 2000 m for "Corner grounded networks")
Vibration resistance	1.5 mm at 3...13 Hz, 1 g at 13...200 Hz according to IEC/EN 60068-2-6
Shock resistance	15 g for 11 ms according to IEC/EN 60068-2-27
Approvals	CE, UR, GOST

HMHF
8 P01 325 EN.04/04

The filters option *>pDRIVE< RFI* 480/12-TN...480/180-TN are designed for mounting behind the inverter ("footprint filter") or sideways, to the left of the inverter. In either case take care of a well-conductive connection between the screen connection of the motor cable and the inverter.

	Option *>pDRIVE<* RFI 480/12-TN	RFI 480/26-TN	RFI 480/35-TN	RFI 480/46-TN
Order number	8 P01 280	8 P01 281	8 P01 282	8 P01 283
Nominal current	12 A	26 A	35 A	46 A
Maximum leakage current	7 mA	8 mA	7 mA	14 mA
Continuous leakage current	3 mA	3 mA	3 mA	3 mA
Protection degree	IP20, top side IP41			
Losses	5 W	6 W	14 W	13 W
Weight	2.2 kg	4 kg	6 kg	7 kg
Dimension A1	290 mm	325 mm	370 mm	380 mm
Dimension A2	275 mm	309 mm	355 mm	365 mm
Dimension A3	275 mm	309 mm	355 mm	365 mm
Dimension B1	130 mm	155 mm	175 mm	210 mm
Dimension B2	105 mm	130 mm	150 mm	190 mm
Dimension C1	40 mm	50 mm	60 mm	60 mm
Fixing D1	4 x ∅ 4.5 mm / 2 x ∅ 4.5 mm	4 x ∅ 4.5 mm / 2 x ∅ 4.5 mm	4 x ∅ 5.5 mm / 2 x ∅ 5.5 mm	4 x ∅ 5.5 mm / 2 x ∅ 5.5 mm
Connection terminal	max. 4 mm²	max. 6 mm²	max. 10 mm²	max. 16 mm²
Connection PE terminal	max. 4 mm²	max. 6 mm²	max. 10 mm²	max. 16 mm²

	Option *>pDRIVE<* RFI 480/72-TN	RFI 480/90-TN	RFI 480/92-TN	RFI 480/180-TN
Order number	8 P01 284	8 P01 285	8 P01 286	8 P01 287
Nominal current	72 A	90 A	92 A	180 A
Maximum leakage current	60 mA	60 mA	60 mA	140 mA
Continuous leakage current	3 mA	3 mA	3 mA	3 mA
Protection degree	IP20, top side IP41			
Losses	14 W	11 W	30 W	58 W
Weight	12 kg	15 kg	17 kg	40 kg
Dimension A1	500 mm	525 mm	650 mm	750 mm
Dimension A2	460 mm	502.5 mm	631 mm	725 mm
Dimension A3	480 mm	502.5 mm	631 mm	725 mm
Dimension B1	230 mm	240 mm	240 mm	320 mm
Dimension B2	190 mm	200 mm	200 mm	280 mm
Dimension C1	62 mm	79 mm	79 mm	119 mm
Dimension C2	–	40 mm	40 mm	80 mm
Fixing D1	4 x ∅ 6.6 mm / 2 x ∅ 6.6 mm	4 x ∅ 6.6 mm / 4 x ∅ 6.6 mm	4 x ∅ 6.6 mm / 4 x ∅ 6.6 mm	4 x ∅ 9 mm / 4 x ∅ 9 mm
Connection terminal	max. 50 mm²	max. 50 mm²	max. 50 mm²	max. 150 mm²
Connection PE terminal	max. 50 mm²	max. 50 mm²	max. 50 mm²	max. 150 mm²

>pDRIVE< RFI 480/12-TN up to RFI 480/72-TN

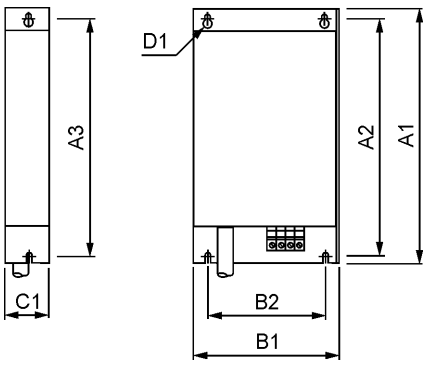

>pDRIVE< RFI 480/90-TN up to RFI 480/180-TN

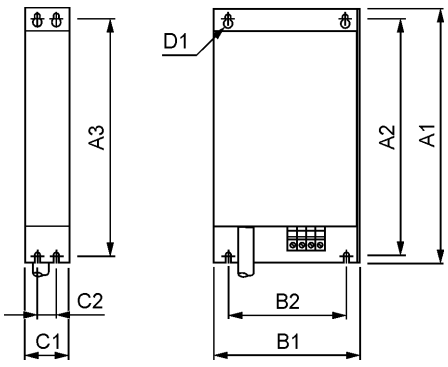

	Option >*pDRIVE*< RFI 480/300-TN	RFI 480/600-TN	RFI 480/800-TN
Order number	8 P01 288	8 P01 289	8 P01 290
Nominal current	300 A	580 A	740 A
Maximum leakage current	350 mA	350 mA	350 mA
Continuous leakage current	3 mA	3 mA	3 mA
Protection degree	IP00, with protection against contact		
Losses	60 W	125 W	210 W
Weight	13 kg	15 kg	25 kg
Dimension A1	306 mm	306 mm	356 mm
Dimension A2	300 mm	300 mm	350 mm
Dimension A3	40 mm	95 mm	100 mm
Dimension A4	120 mm	120 mm	145 mm
Dimension B1	260 mm	260 mm	280 mm
Dimension B2	235 mm	235 mm	255 mm
Dimension B3	210 mm	210 mm	230 mm
Dimension C1	135 mm	135 mm	170 mm
Dimension C2	65 mm	65 mm	85 mm
Protective cover L	800 mm	800 mm	900 mm
Fixing D1	6 x ∅ 12 mm	6 x ∅ 12 mm	6 x ∅ 12 mm
Connection bar	25 x 6 mm 1 x M10	32 x 8 mm 2 x M10	40 x 10 mm 2 x M10
Connection PE	M12	M12	M12

>*pDRIVE*< *RFI 480/300-TN* up to *RFI 480/800-TN*

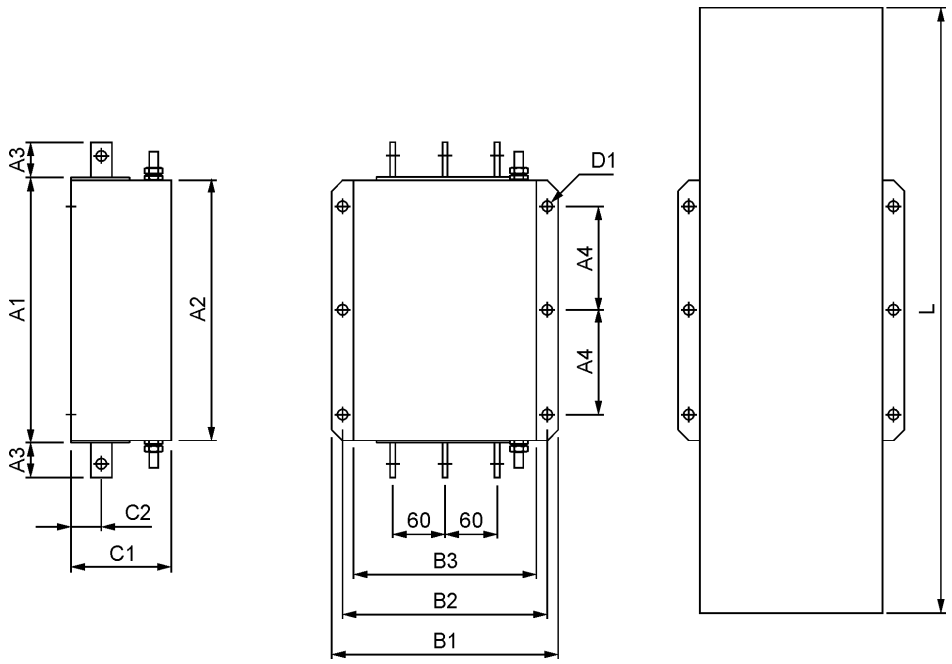

DC choke DCL

The DC choke reduces the mains current harmonics and thus it reduces the total mains current.

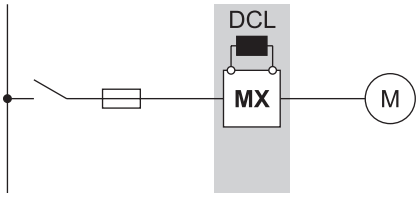

>pDRIVE< MX pro inverters can be connected to a standard industry mains without additional actions.

Typically, devices with small power are operated on mains supply with low short-circuit power.

Devices of the power range 18.5...75 kW have a DC choke built-in and so they are also qualified for higher mains short-circuit powers up to 22 kA.

The *>pDRIVE< MX pro* inverters from 90 kW are designed for operation on a transformer with matching power. In case of mains with higher short-circuit power an external choke is absolutely necessary and it is always recommended to reduce to current harmonics.

Using the option *>pDRIVE< DCL* or *>pDRIVE< DCL-BOX* is generally required:

- in case of using the inverters in residential environments
- in case of mains short circuit currents at the inverter supply up to 35 (50) kA
- if several inverters are operated on common mains supply
- if power factor correction systems may be overloaded by means of the inverter
- if the inverter is operated by means of a generator
- if the mains supply has an unsymmetry ≥ 1.8 %

HMHF

Additionally, please observe depending on the size of the device:

- ***>pDRIVE< MX pro* 4V0,75...4V15**
  The use of the option *>pDRIVE< DCL* is required if the mains short-circuit current is 5…35 kA.
- ***>pDRIVE< MX pro* 4V18...4V75**
  The use of the option *>pDRIVE< DCL* is required if the mains short-circuit current is 22...35 kA.
- ***>pDRIVE< MX pro* from 90 kW**
  The option *>pDRIVE< DCL-BOX* is required if the device is not supplied by means of a transformer with matching power. Maximum mains short-circuit current 50 kA.

8 P01 325 EN.04/04

If the option *>pDRIVE< DCL* is used, the inverters with a nominal current of 16…75 A observe the limits for current harmonics which are specified in the IEC/EN 61000-3-12 standard. Therefore a short circuit ratio ≥ 120 is required.

	General technical data option *>pDRIVE< DCL*
Operating voltage	400...850 V DC
Overload capability	150 % for 60 s per 10 min, 200 % for 2 s
Ambient temperature	-10...+50 °C (up to 60 °C with derating)
Storage temperature	-40...+70 °C
Altitude	0...1000 m (up to 3000 m with derating)
Vibration resistance	1.5 mm at 3...13 Hz, 1 g at 13...200 Hz according to IEC/EN 60068-2-6
Shock resistance	15 g for 11 ms according to IEC/EN 60068-2-27
Protection degree	IP20
Approvals	CE, GOST

The option >*pDRIVE*< *DCL* is available as an external option for the devices >*pDRIVE*< *MX pro 4V0,75...4V75*. It is connected to the terminals PO and PA/+ at the bottom of the inverter instead of the wire link.

For low-power devices also a mounting kit >*pDRIVE*< *FPK* is available in order to install the DC choke behind the inverter (see chapter "Footprint kit FPK", page 100).

	Option >*pDRIVE*<				
	DCL 2	DCL 4	DCL 8	DCL 11	DCL 14
Order number	8 P01 200	8 P01 201	8 P01 202	8 P01 203	8 P01 204
Nom. current (therm.) @50°C	2.25 A	4.3 A	8 A	10.7 A	14.3 A
Nominal inductivity	18 mH	10 mH	6.8 mH	3.9 mH	3.2 mH
Losses	8 W	11 W	23 W	27 W	32 W
Weight	0.65 kg	1 kg	1.7 kg	1.7 kg	2.2 kg
Dimension A1	103 mm	103 mm	134 mm	134 mm	134 mm
Dimension B1	60 mm	60 mm	96 mm	96 mm	96 mm
Dimension B2	50 mm	50 mm	80 mm	80 mm	80 mm
Dimension C1	95 mm	118 mm	115 mm	115 mm	120 mm
Dimension C2	60 mm	77 mm	80 mm	79 mm	85 mm
Dimension C3	51 mm	68 mm	65 mm	64 mm	70 mm
Fixing D1	4 x ∅ 3.5 mm	4 x ∅ 3.5 mm	4 x ∅ 5.5 mm	4 x ∅ 5.5 mm	4 x ∅ 5.5 mm
Connection to inverter	Terminal max. 2.5 mm²	Terminals max. 2.5 mm²	Terminals max. 2.5 mm²	Terminals max. 2.5 mm²	Terminals max. 2.5 mm²
Recommended cable	1.5 mm²	1.5 mm²	1.5 mm²	1.5 mm²	1.5 mm²
Connection PE	Terminal max. 10 mm²	Terminal max. 10 mm²	Terminal max. 10 mm²	Terminal max. 10 mm²	Terminal max. 10 mm²

	Option >*pDRIVE*<				
	DCL 19	DCL 27	DCL 44	DCL 85	DCL 171
Order number	8 P01 205	8 P01 206	8 P01 207	8 P01 208	8 P01 209
Nom. current (therm.) @50°C	19.2 A	27.4 A	44 A	84.5 A	171 A
Nominal inductivity	2.2 mH	1.6 mH	1.2 mH	0.52 mH	0.22 mH
Losses	33 W	43 W	58 W	98 W	125 W
Weight	2.5 kg	3 kg	4.3 kg	5.6 kg	9 kg
Dimension A1	134 mm	134 mm	142 mm	171 mm	–
Dimension B1	96 mm	96 mm	108 mm	126 mm	–
Dimension B2	80 mm	80 mm	90 mm	105 mm	–
Dimension C1	120 mm	130 mm	145 mm	170 mm	–
Dimension C2	89 mm	99 mm	112 mm	120 mm	–
Dimension C3	74 mm	84 mm	97 mm	103 mm	–
Fixing D1	4 x ∅ 5.5 mm	4 x ∅ 5.5 mm	4 x ∅ 5.5 mm	4 x ∅ 7 mm	4 x ∅ 7 mm
Connection to inverter	Terminals max. 4 mm²	Terminals max. 6 mm²	Terminals max. 10 mm²	Terminals max. 35 mm²	∅ 7 mm
Recommended cable	2.5 mm²	4 mm²	10 mm²	35 mm²	70 mm²
Connection PE	Terminal max. 10 mm²	Terminal max. 10 mm²	Terminal max. 10 mm²	Terminal max. 16 mm²	Terminal max. 35 mm²

HMHF

8 P01 325 EN.04/04

>pDRIVE< DCL 2 up to DCL 85

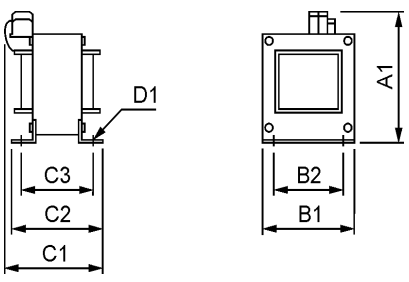

>pDRIVE< DCL 171

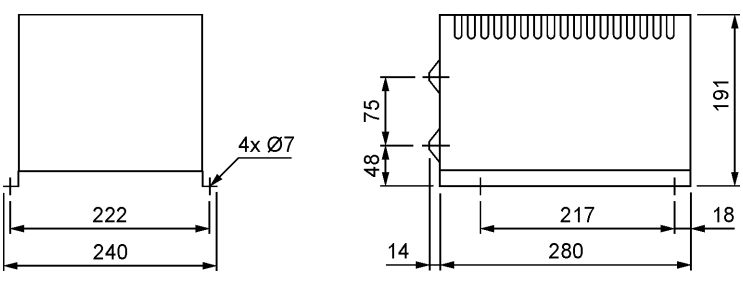

The *>pDRIVE< DCL-BOX* is an option for *pDRIVE< MX pro* inverters from 90 kW which has to be installed at the top of the inverter. Use the terminals PO and PA/+ at the top of the frequency inverter for the electric connection with the inverter. The DCL-Box needs the air flow of the inverter for cooling but simultaneously it increases the protection degree of the top of the device to IP31. The cooling air channel in the DC box and in the inverter is designed in protection degree IP54.

	General technical data option *>pDRIVE< DCL-BOX*
Operating voltage	400...850 V DC
Overload capability	125 % for 60 s per 10 min, 135 % for 2 s
Ambient temperature	-10...+50 °C (up to 60 °C with derating)
Storage temperature	-25...+70 °C
Altitude	0...1000 m (up to 3000 m with derating)
Vibration resistance	1.5 mm at 3...13 Hz, 1 g at 13...200 Hz according to IEC/EN 60068-2-6
Shock resistance	7 g for 11 ms according to IEC/EN 60068-2-27
Cooling	forced, by means of the air flow of the inverter
Protection degree	IP31, cooling air channel IP54
Approvals	CE, UR, cUR, GOST

	Option *>pDRIVE< DCL-Box*					
	240	290	350	490	570	700
Order number	8 P01 210	8 P01 211	8 P01 212	8 P01 213	8 P01 214	8 P01 215
Nom. current (therm.) @50°C	243 A	290 A	351 A	486 A	574 A	702 A
Nominal current (magn.)	380 A	471 A	558 A	760 A	840 A	1116 A
Nominal inductivity	210 µH	150 µH	138 µH	105 µH	95 µH	69 µH
Losses	205 W	210 W	270 W	345 W	390 W	495 W
Weight	24 kg	32 kg	36 kg	53 kg	67 kg	67 kg
Dimension A1	920 mm	1022 mm	1190 mm	1190 mm	1190 mm	1190 mm
Dimension A2	680 mm	782 mm	950 mm	950 mm	950 mm	950 mm
Dimension A3	75 mm	72 mm	75 mm	75 mm	75 mm	75 mm
Dimension A4	150 mm	150 mm	150 mm	150 mm	150 mm	150 mm
Dimension B1	320 mm	360 mm	340 mm	440 mm	595 mm	595 mm
Dimension B2	250 mm	298 mm	285 mm	350 mm	540 mm	540 mm
Fixing D1	4x ∅ 11.5 mm	4x ∅ 11.5 mm	4x ∅ 11.5 mm	4x ∅ 11.5 mm	4x ∅ 11.5 mm	4x ∅ 11.5 mm

>pDRIVE< DCL-BOX 240 up to DCL-BOX 700

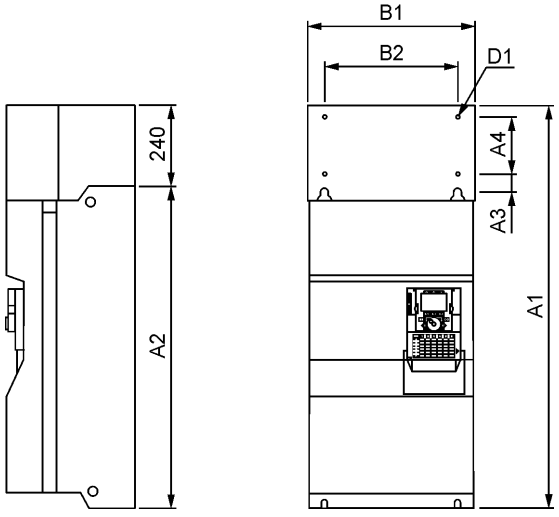

	Option *>pDRIVE< DCL-Box*		
	860	1160	1400
Order number	8 P01 216	8 P01 217	8 P01 218
Nom. current (therm.) @50°C	861 A	1160 A	1404 A
Nominal current (magn.)	1260 A	1884 A	2232 A
Nominal inductivity	63 µH	37.5 µH	34.5 µH
Losses	625 W	700 W	920 W
Weight	105 kg	115 kg	135 kg
Dimension A1	1390 mm	1390 mm	1390 mm
Dimension A2	1150 mm	1150 mm	1150 mm
Dimension A3	75 mm	75 mm	75 mm
Dimension A4	150 mm	150 mm	150 mm
Dimension B1	2x 445 mm	2x 445 mm	2x 560 mm
Dimension B2	350 mm	350 mm	495 mm
Fixing D1	8x ∅ 11.5 mm	8x ∅ 11.5 mm	8x ∅ 11.5 mm

>pDRIVE< DCL-BOX 860 up to DCL-BOX 1400

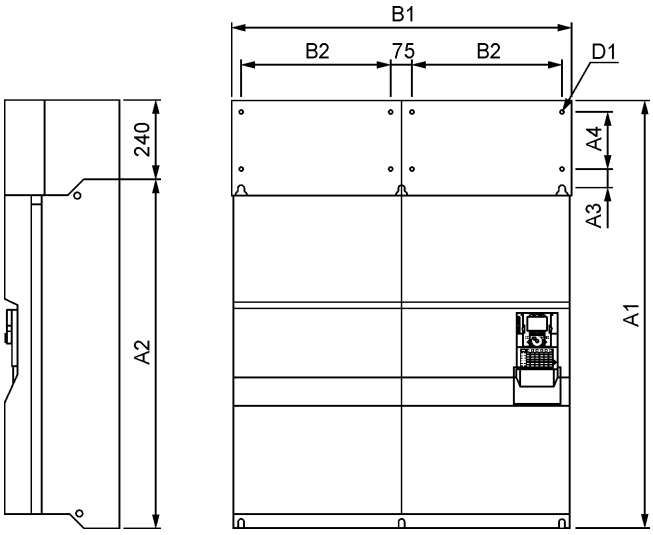

HMHF

8 P01 325 EN.04/04

Assignment of the DC choke

Inverter	DC choke	Wiring diagram
>pDRIVE< MX pro 4V90/110	1 x DC-choke 1	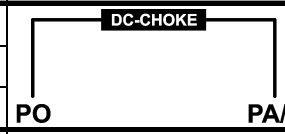
>pDRIVE< MX pro 4V110/132	1 x DC-choke 2	
>pDRIVE< MX pro 4V132/160	1 x DC-choke 4	
>pDRIVE< MX pro 4V160/200	2 x DC-choke 1	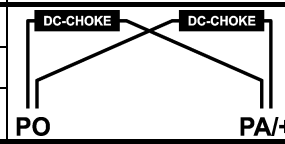
>pDRIVE< MX pro 4V200/250	2 x DC-choke 3	
>pDRIVE< MX pro 4V250/315	2 x DC-choke 4	
>pDRIVE< MX pro 4V315/400	3 x DC-choke 3	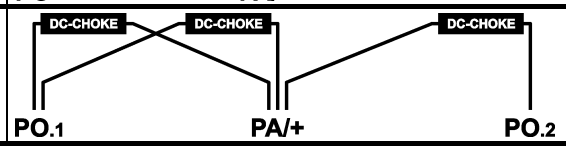
>pDRIVE< MX pro 4V400/500	4 x DC-choke 2	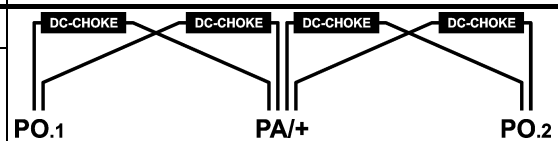
>pDRIVE< MX pro 4V500/630	4 x DC-choke 7	

Mechanical connection to the air duct for separated air flow

	Option >*pDRIVE*< *DCL-Box*					
	240	290	350	490	570	700
Dimension B1	320 mm	360 mm	340 mm	440 mm	595 mm	595 mm
Dimension B2	280 mm	330 mm	250 mm	350 mm	510 mm	510 mm
Dimension B3	35 mm	30 mm	55 mm	55 mm	55 mm	55 mm
Dimension C1	238 mm	238 mm	238 mm	238 mm	238 mm	238 mm
Dimension C2	170 mm	170 mm	180 mm	180 mm	180 mm	180 mm
Dimension C3	35 mm	30 mm	40 mm	40 mm	40 mm	40 mm

	Option >*pDRIVE*< *DCL-Box*		
	860	1160	1400
Dimension B1	2 x 445 mm	2 x 445 mm	2 x 560 mm
Dimension B2	350 mm	350 mm	470 mm
Dimension B3	55 mm	55 mm	55 mm
Dimension C1	238 mm	238 mm	238 mm
Dimension C2	180 mm	180 mm	180 mm
Dimension C3	40 mm	40 mm	40 mm

HMHF

8 P01 325 EN.04/04

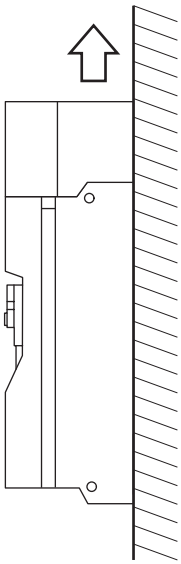

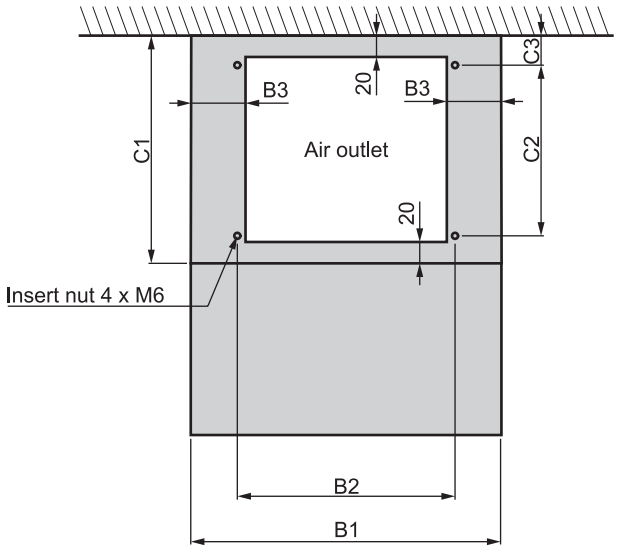

Line reactor NDU

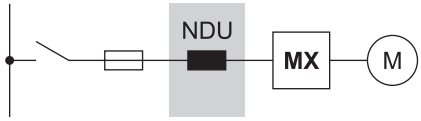

The option >*pDRIVE*< *NDU* can be used to reduce the mains current harmonics.

This option is available for all >*pDRIVE*< *MX eco* 4V & *pro* 4V. The inverters can be connected to a standard industry mains without additional actions.

Typically, devices with small power are operated on mains supply with low short-circuit power.

Devices of the power range 18.5...75 kW have a DC choke built-in and so they are also qualified for higher mains short-circuit powers up to 22 kA.

From 90 kW the inverters are designed for operation on a transformer with matching power. In case of mains with higher short-circuit power an external choke is absolutely necessary and it is always recommended to reduce to current harmonics.

Using the option >*pDRIVE*< *NDU* is required:

- in case of using the inverters in residential environments
- if several inverters are operated on common mains supply
- if power factor correction systems may be overloaded by means of the inverter
- if the inverter is operated by means of a generator
- if the mains supply has an unsymmetry ≥ 1.8 %
- in case of mains short-circuit currents up to 100 kA
- in case of >*pDRIVE*< *MX eco* 4V *& pro* 4V from 90 kW if the use of the DCL box is not possible for lack of space

At full load the voltage drop at the choke cannot be balanced any longer by the inverter, that means that the output voltage is up to 3 % smaller than the mains voltage in front of the choke.

The option >*pDRIVE*< *NDU* is connected on the mains-side of the inverter. The line reactors can be mounted in any position. But in either case take care of well ventilation.

An installation on the mounting wall is also possible by means of the shipping brackets.

For low-power devices also a mounting kit >*pDRIVE*< *FPK* is available in order to install the line reactor behind the inverter (see chapter "Footprint kit FPK", page 100).

	General technical data
Operating voltage	3AC 380 V -15 % ... 690 V +10 %
Nominal frequency	50/60 Hz ±5 %
Overload capability	NDU 40...160: 150 % for 60 s per 10 min, 200 % for 2 s NDU 195...760: 125 % for 60 s per 10 min, 135 % for 2 s
Ambient temperature	-10...+50 °C (up to 60 °C with derating)
Storage temperature	-40...+70 °C
Altitude	0...1000 m (up to 3000 m with derating)
Vibration resistance	1.5 mm at 3...13 Hz, 1 g at 13...200 Hz according to IEC/EN 60068-2-6
Shock resistance	15 g for 11 ms according to IEC/EN 60068-2-27
Protection degree	IP00
Approvals	CE, UR, cUR, GOST
Connection	Using connection lugs

HMHF
8 P01 325 EN.04/04

	Option >*pDRIVE*<								
	NDU 10	NDU 23	NDU 40	NDU 70	NDU 100	NDU 160	NDU 195	NDU 230	NDU 235
Order number	8 P01 238	8 P01 239	8 P01 220	8 P01 221	8 P01 222	8 P01 223	8 P01 224	8 P01 236	8 P01 225
Nom. current (therm.) @40°C	10.5 A	23 A	40 A	70 A	100 A	160 A	195 A	230 A	235 A
Nom. current (magn.)	20 A	44 A	78 A	130 A	180 A	320 A	370 A	405 A	445 A
Nom. inductivity	2.8 (1.6) mH	1.3 (0.5) mH	739 µH	454 µH	350 µH	220 µH	155 µH	230 µH	120 µH
Losses	18 W	27 W	120 W	140 W	185 W	220 W	230 W	330 W	240 W
Weight	3 kg	6.3 kg	21 kg	24 kg	25 kg	28 kg	30 kg	79 kg	35 kg
Dimension A1	147 mm	175 mm	240 mm	240 mm	240 mm	305 mm	330 mm	440 mm	380 mm
Dimension A2	104 mm	132 mm	205 mm	205 mm	205 mm	275 mm	300 mm	400 mm	350 mm
Dimension A3	–	–	180 mm	180 mm	180 mm	240 mm	260 mm	340 mm	300 mm
Dimension B1	125 mm	155 mm	180 mm	180 mm	180 mm	280 mm	280 mm	385 mm	320 mm
Dimension B2	100 mm	130 mm	100 mm	100 mm	100 mm	200 mm	200 mm	300 mm	225 mm
Dimension C1	65 mm	90 mm	100 mm	140 mm	170 mm	210 mm	210 mm	265 mm	210 mm
Dimension C2	8 mm	10 mm	90 mm	130 mm	160 mm	200 mm	200 mm	245 mm	200 mm
Dimension C3	45 mm	56 mm	60 mm	80 mm	100 mm	125 mm	125 mm	150 mm	150 mm
Fixing D1	5 x 8 mm	8 x 12 mm	∅ 7 mm	∅ 7 mm	∅ 7 mm	∅ 9 mm	∅ 9 mm	∅ 13 mm	∅ 9 mm
Connection D2	Terminal max. 4 mm^2	Terminal max. 10 mm^2	∅ 7 mm	∅ 7 mm	∅ 9 mm	∅ 9 mm	∅ 11 mm	∅ 13 mm	∅ 11 mm
Recomm. cable	1.5 mm^2	4 mm^2	10 mm^2	25 mm^2	35 mm^2	70 mm^2	95 mm^2	95 mm^2	95 mm^2
Connection PE	M4	M4	M6	M6	M8	M10	M10	M12	M10

	Option >*pDRIVE*<								
	NDU 280	NDU 315	NDU 365	NDU 450	NDU 475	NDU 540	NDU 620	NDU 650	NDU 760
Order number	8 P01 226	8 P01 227	8 P01 228	8 P01 237	8 P01 230	8 P01 231	8 P01 232	8 P01 233	8 P01 234
Nom. current (therm.) @40°C	280 A	315 A	365 A	450 A	475 A	540 A	620 A	650 A	760 A
Nom. current (magn.)	530 A	570 A	685 A	770 A	850 A	1025 A	1180 A	1150 A	1350 A
Nom. inductivity	98 µH	85 µH	66 µH	100 µH	60 µH	38 µH	26 µH	38 µH	32 µH
Losses	260 W	280 W	280 W	495 W	320 W	320 W	320 W	320 W	450 W
Weight	40 kg	46 kg	43 kg	90 kg	70 kg	55 kg	60 kg	62 kg	82 kg
Dimension A1	380 mm	380 mm	380 mm	440 mm	380 mm	380 mm	380 mm	440 mm	440 mm
Dimension A2	350 mm	350 mm	350 mm	400 mm	350 mm	350 mm	350 mm	400 mm	400 mm
Dimension A3	300 mm	300 mm	300 mm	340 mm	300 mm	300 mm	300 mm	310 mm	340 mm
Dimension B1	320 mm	320 mm	320 mm	385 mm	320 mm	320 mm	320 mm	360 mm	385 mm
Dimension B2	225 mm	225 mm	225 mm	300 mm	225 mm	225 mm	225 mm	300 mm	300 mm
Dimension C1	210 mm	210 mm	250 mm	305 mm	250 mm	250 mm	250 mm	250 mm	275 mm
Dimension C2	200 mm	200 mm	230 mm	295 mm	230 mm	230 mm	230 mm	230 mm	250 mm
Dimension C3	150 mm	150 mm	150 mm	190 mm	150 mm	150 mm	150 mm	150 mm	125 mm
Fixing D1	∅ 9 mm	∅ 9 mm	∅ 11 mm	∅ 13 mm	∅ 11 mm	∅ 11 mm	∅ 13 mm	∅ 13 mm	∅ 13 mm
Connection D2	∅ 11 mm	∅ 11 mm	∅ 13 mm	∅ 13 mm	∅ 13 mm	∅ 13 mm	∅ 13 mm	2x ∅13mm	2x ∅13mm
Connection PE	M10	M10	M12	M12	M12	M12	M12	M12	M12

>pDRIVE< NDU 10 ... 23

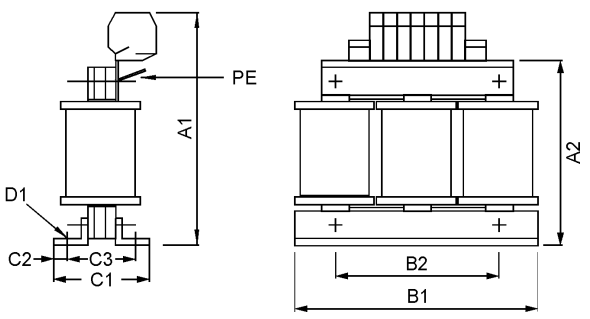

>pDRIVE< NDU 40 ... 760

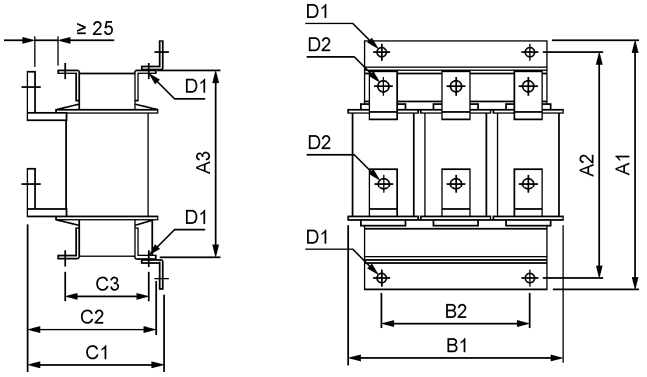

Footprint kit FPK

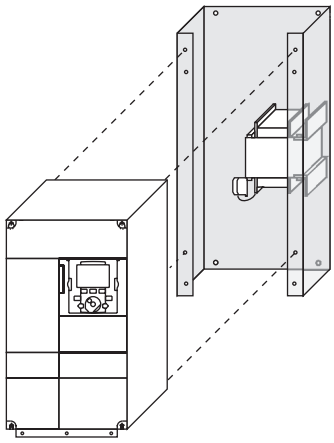

The option >*pDRIVE*< *FPK* provides the possibility to install an additional DC choke >*pDRIVE*< *DCL* or line reactor >*pDRIVE*< *NDU* behind the frequency inverter.

This option is available for following frequency inverters:

- >*pDRIVE*< *MX eco & pro* 4V from 0.7...37 kW
  in combination with option >*pDRIVE*< *DCL*
- >*pDRIVE*< *MX pro* 6V2,2/3,0...6V22/30
  in combination with option >*pDRIVE*< *NDU*

	General technical data
Design	Mounting kit made of galvanised sheet steel
Protection degree	Depending on the respective choke

	Option >*pDRIVE*< *FPK*					
	155x260	175x295	210x295	230x400	240x420	240x550
Order number	8 P01 461	8 P01 462	8 P01 463	8 P01 464	8 P01 465	8 P01 466
Weight	2 kg	2.2 kg	2.2 kg	3.1 kg	3.9 kg	4.6 kg
Dimension A1	260 mm	295 mm	295 mm	400 mm	420 mm	550 mm
Dimension A2	240 mm	275 mm	275 mm	380 mm	400 mm	530 mm
Dimension B1	155 mm	195 mm	210 mm	230 mm	240 mm	240 mm
Dimension B2	135 mm	135 mm	140 mm	160 mm	200 mm	150 mm
Dimension C1	80 mm	80 mm	80 mm	90 mm	105 mm	105 mm
Dimension D1	6.6 mm	6.6 mm	6.6 mm	6.6 mm	6.6 mm	6.6 mm

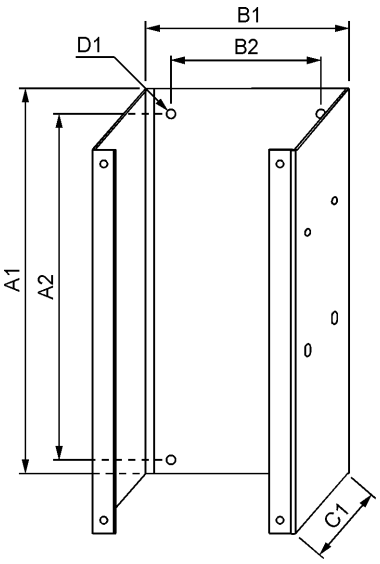

The individual mounting kits may differ marginally from the illustration. Some of them are also designed of two parts.

HMHF
8 P01 325 EN.04/04

Braking resistor BR

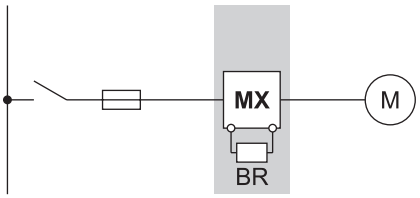

The braking resistor converts the power accumulating during generator operation into heat and thus prevents a further rising of the DC link voltage.

The following inverters are prepared for the direct connection of a braking resistor:

- >*pDRIVE*< *MX pro* 4V0,75...4V160/200
- >*pDRIVE*< *MX pro* 6V2,2/3,0...6V160/200

An external braking unit >*pDRIVE*< *BU* is required for

- >*pDRIVE*< *MX pro* from 4V200/250
- >*pDRIVE*< *MX pro* from 6V200/250

When allocating the braking resistors >*pDRIVE*< *BU* to the frequency inverters, observe the following points:

- Minimum braking resistance per inverter power
- Required maximum braking power in order to avoid shut down due to overvoltage
- Necessary continuous power depending on the application requirements
- Correct adjustment of parameters to protect the resistor
- installation of an additional thermal relay, if required

HMHF

The surface of the resistor may reach up to 250°C. Thus it should be mounted on non-combustible material.

The braking resistors BR 200R to BR 30R protect the inverter, the braking unit and the lines. In case of an overload, an internal shut-down takes place (as in case of a fuse). The braking resistor must be exchanged afterwards.

The braking resistors BR 200R to BR 30R are designed for air self-cooling at vertical mounting (or horizontal with cooling fins pointing upwards).

The unhindered air flow may not be impaired by other devices or casing parts!

8 P01 325 EN.04/04

	General technical data
Operating voltage	max. 1100 V DC
Design	BR 200R, BR 120R, BR 50R, BR 30R: compact resistors (welded) BR 24R … BR 2R1: Steel-grid fixed resistors in a sheet metal case
Approvals	CE, $_{C}UR_{US}$, GOST

	Option >*pDRIVE* BR 200R *)	BR 120R	BR 50R	BR 30R
Order number	8 P01 262	8 P01 263	8 P01 264	8 P01 265
Resistance	200 Ω	120 Ω	50 Ω	30 Ω
Continuous power	0.25 kW	1.0 kW	1.5 kW	2.0 kW
Peak power @ 680 V DC	2.3 kW	3.9 kW	9.3 kW	15.4 kW
Peak power @ 785 V DC	3.1 kW	5.1 kW	12.3 kW	20.5 kW
Peak power @ 975 V DC	–	7.9 kW	19.0 kW	31.7 kW
Peak power @ 1075 V DC	–	9.6 kW	23.1 kW	38.5 kW
Duty cycle at 120 s cycle @680V / 785V / 975V / 1075V	6 / 5 / – / – %	18 / 13 / 8 / 6 %	10 / 7 / 5 / 4 %	8 / 6 / 4 / 3 %
Set value of thermal relay	1.1 A	2.9 A	5.5 A	8.2 A
Protection degree	IP65	IP66	IP66	IP66
Dimension A1	–	260 mm	410 mm	610 mm
Dimension A2	–	28 mm	78 mm	178 mm
Dimension A3	–	110 mm	160 mm	160 mm
Connection cross-section	1.5 mm^2	2.5 mm^2	2.5 mm^2	2.5 mm^2
Connection	Cable 1.5 mm^2 Length: 500 mm	Terminal max. 2.5 mm^2	Terminal max. 2.5 mm^2	Terminal max. 2.5 mm^2
Weight	0.6 kg	3.0 kg	5.5 kg	9.0 kg

*) only for MX pro 4V

>pDRIVE< BR 200R

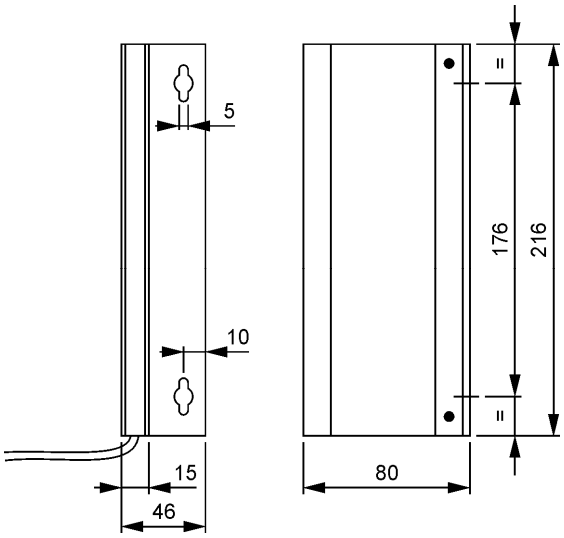

>pDRIVE< BR 120R … 30R

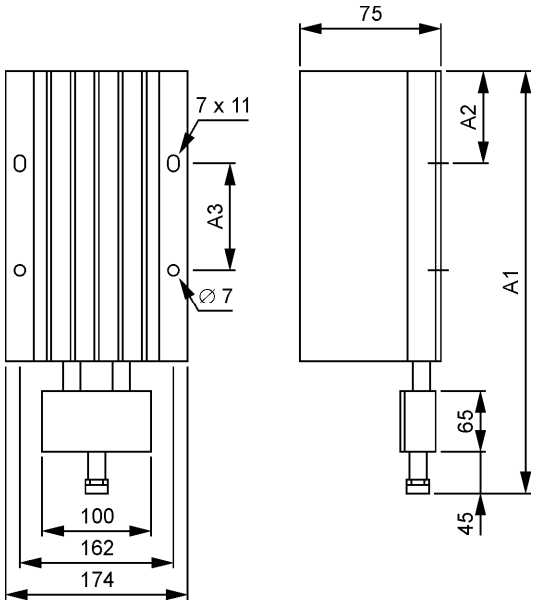

HMHF
8 P01 325 EN.04/04

	Option >*pDRIVE*<			
	BR 15R	BR 12R	BR 10R	BR 8R
Order number	8 P01 266	8 P01 267	8 P01 268	8 P01 269
Resistance	15 Ω	12 Ω	10 Ω	8 Ω
Continuous power	8.5 kW	4.0 kW	14 kW	7.0 kW
Peak power @ 680 V DC	31 kW	39 kW	46 kW	58 kW
Peak power @ 785 V DC	41 kW	51 kW	62 kW	77 kW
Peak power @ 975 V DC	63 kW	79 kW	95 kW	119 kW
Peak power @ 1075 V DC	77 kW	96 kW	116 kW	144 kW
Duty cycle at 120 s cycle @680V / 785V / 975V / 1075V	19 / 14 / 8 / 6 %	6 / 4 / 3 / 2 %	22 / 15 / 9 / 7 %	7 / 5 / 3 / 3 %
Set value of thermal relay	24 A	18 A	37 A	30 A
Protection degree	IP23	IP23	IP23	IP23
Dimension A1	520 mm	520 mm	520 mm	520 mm
Dimension B1	595 mm	395 mm	795 mm	395 mm
Dimension B2	570 mm	370 mm	770 mm	370 mm
Connection cross-section	6 mm^2	4 mm^2	16 mm^2	6 mm^2
Connection D1	M8	M6	M8	M6
Weight	32 kg	23 kg	48 kg	26 kg

	Option >*pDRIVE*<			
	BR 6R	BR 3R5	BR 3R3	BR 2R1
Order number	8 P01 270	8 P01 271	8 P01 272	8 P01 273
Resistance	15 Ω	12 Ω	10 Ω	8 Ω
Continuous power	8.5 kW	4.0 kW	14 kW	7.0 kW
Peak power @ 680 V DC	31 kW	39 kW	46 kW	58 kW
Peak power @ 785 V DC	41 kW	51 kW	62 kW	77 kW
Peak power @ 975 V DC	63 kW	79 kW	95 kW	119 kW
Peak power @ 1075 V DC	77 kW	96 kW	116 kW	144 kW
Duty cycle at 120 s cycle @680V / 785V / 975V / 1075V	19 / 14 / 8 / 6 %	6 / 4 / 3 / 2 %	22 / 15 / 9 / 7 %	7 / 5 / 3 / 3 %
Set value of thermal relay	24 A	18 A	37 A	30 A
Protection degree	IP23	IP23	IP23	IP23
Dimension A1	520 mm	520 mm	770 mm	1100 mm
Dimension B1	995 mm	995 mm	995 mm	995 mm
Dimension B2	970 mm	970 mm	970 mm	970 mm
Connection cross-section	16 mm^2	16 mm^2	50 mm^2	95 mm^2
Connection D1	M8	M8	M10	M10
Weight	61 kg	61 kg	101 kg	138 kg

>pDRIVE< BR 15R...2R1

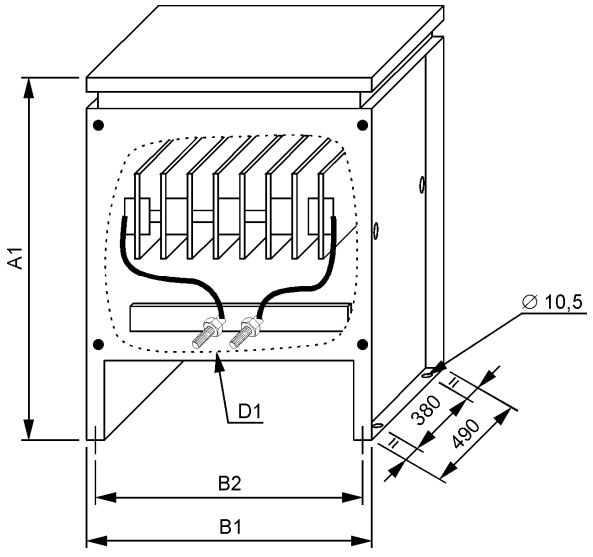

Output motor filter AMF

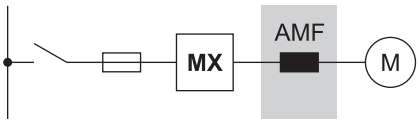

At the output of a voltage source frequency inverter there is a pulsed voltage with a pulse frequency of 2...max. 16 kHz (depending on the device) and a slew rate of more than 10 kV/µs.

The use of the option *>pDRIVE< AMF* has significant advantages concerning the trouble-free operation of the drive:

- Decrease of the voltage load of the motor –recommended from 50 m, necessary from 100 m for 400 V mains supply
  10 m, necessary from 30 m for 690 V mains supply
- Prevention of common mode bearing currents in the motor – especially important at high power
- Great reduction of the influences to other cables – important if the separate laying of motor cables cannot be ensured

By means of the especially developed system the voltage drop at the AMF is negligible small.

The option *>pDRIVE< AMF* is connected at the output side of the inverter into the connection to the motor.

The filters *>pDRIVE< AMF* 215-3 up to 1190-3 have to be installed vertically to ensure sufficient cooling. Furthermore observe the required distance to other devices and case parts.

	General technical data
Operating voltage	3AC 0...690 V
Operating frequency	0...100 Hz
Overload capability	150 % for 60 s per 10 min, 165 % for 2 s
Ambient temperature	-10...+50 °C (up to 60 °C with derating)
Storage temperature	-40…+70 °C
Altitude	0...1000 m (up to 3000 m with derating)
Vibration resistance	1.5 mm at 3...13 Hz, 1 g at 13...200 Hz according to IEC/EN 60068-2-6
Shock resistance	15 g for 11 ms according to IEC/EN 60068-2-27
Protection degree	IP00, with protection against contact
Approvals	CE, UR, cUR, GOST

HMHF
8 P01 325 EN.04/04

The >*pDRIVE*< *AMF* 12-1...90-1 have a built-in temperature sensor (thermoclick opens at temperatures > 125°C). This sensor has to be integrated to the trip message circuit of the whole drive or to the inverter (e.g. digital input for "External fault").

	Option >*pDRIVE*< AMF 12-1	AMF 48-1	AMF 90-1
Order number	8 P01 140	8 P01 141	8 P01 142
Nominal current @50°C	12 A	48 A	90 A
Losses	150 W	250 W	350 W
Weight	3.0 kg	5.0 kg	8.5 kg
Dimension A1	200 mm	235 mm	226 mm
Dimension B1	190 mm	200 mm	234 mm
Dimension B2	170 mm	170 mm	200 mm
Dimension C1	90 mm	130 mm	126 mm
Dimension C2	45 mm	48 mm	78 mm
Fixing D1	8 x 12 mm	8 x 12 mm	8 x 12 mm
Connection D2	Terminal max. 10 mm²	Terminal max. 16 mm²	M8
Connection PE	Terminal max. 10 mm²	Terminal max. 16 mm²	M8

>*pDRIVE*< *AMF 12-1 and AMF 48-1*

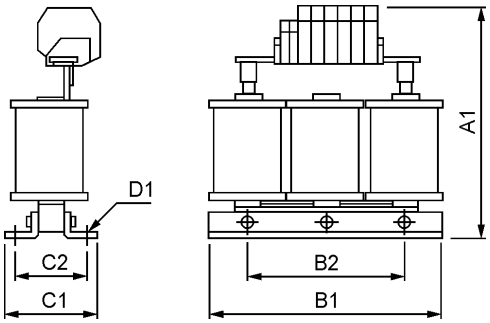

Required minimum distances

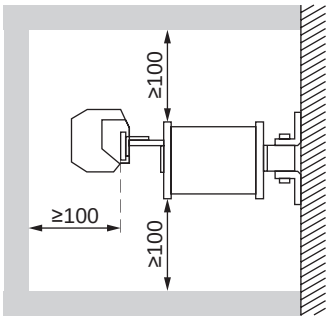

>*pDRIVE*< *AMF 90-1*

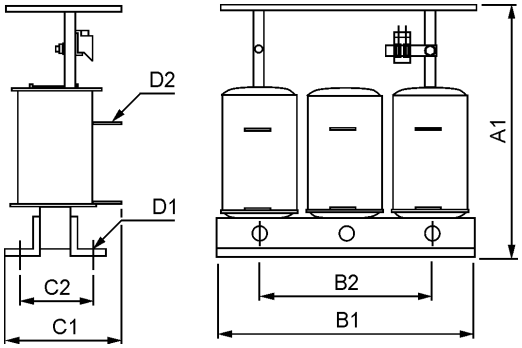

Required minimum distances

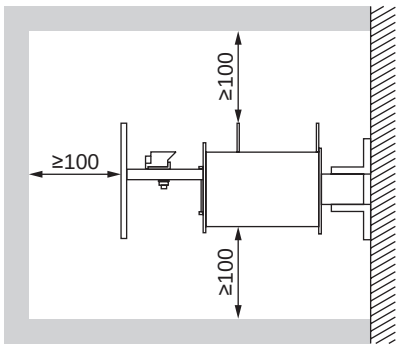

For better effect and cooling the >*pDRIVE*< *AMF* 215-3...1190-3 consist of 3 single-phase chokes. Each has to be connected with one motor phase.

	Option >*pDRIVE*<				
	AMF 215-3	AMF 320-3	AMF 480-3	AMF 760-3	AMF 1190-3
Order number	8 P01 143	8 P01 144	8 P01 145	8 P01 146	8 P01 147
Nominal current @50°C	215 A	314 A	481 A	759 A	1188 A
Losses	430 W	475 W	530 W	600 W	680 W
Weight	15.5 kg	32 kg	58 kg	93 kg	120 kg
Dimension A1	170 mm	210 mm	245 mm	315 mm	370 mm
Dimension A2	150 mm	175 mm	225 mm	275 mm	325 mm
Dimension B1	100 mm	110 mm	200 mm	210 mm	230 mm
Dimension B2	75 mm	75 mm	175 mm	200 mm	200 mm
Dimension C1	250 mm	250 mm	250 mm	250 mm	250 mm
Fixing D1	9 x 13 mm	9 x 13 mm	9 x 13 mm	9 x 13 mm	9 x 13 mm
Connection D2	M10	M10	2 x M12	2 x M12	3 x M12
Connection PE	M8	M8	M8	M8	M8

>pDRIVE< AMF 215-3 and AMF 320-3

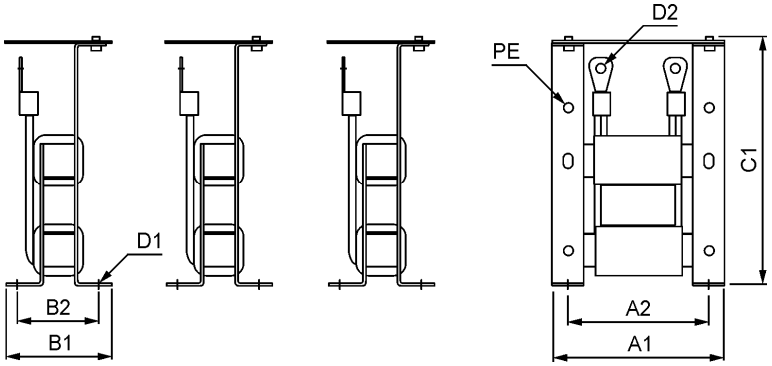

Required minimum distances

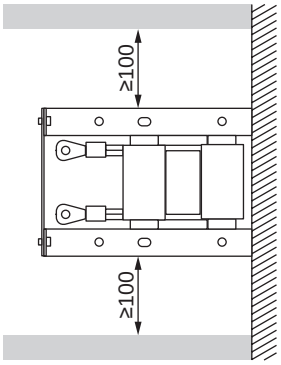

>pDRIVE< AMF 480-3, AMF 760-3 and AMF 1190-3

Required min. distances

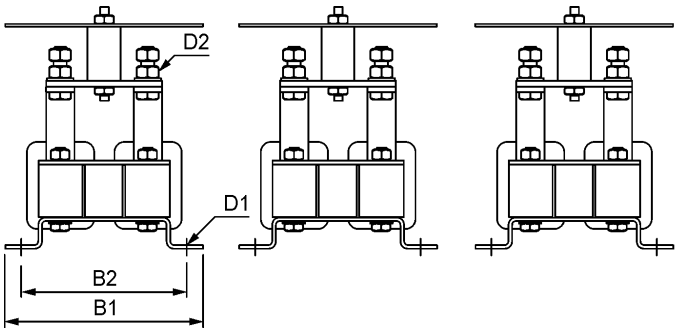

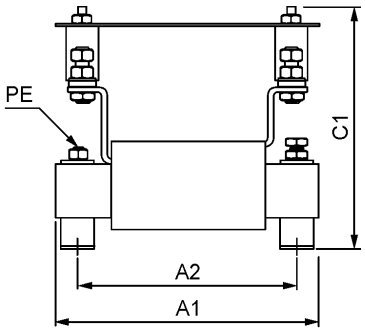

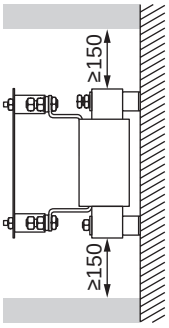

The filters AMF 215-3...1190-3 consist of 3 single-phase chokes.

During installation observe the free space above and below as well as the required minimum distance between the three components.

Arrangement side by side

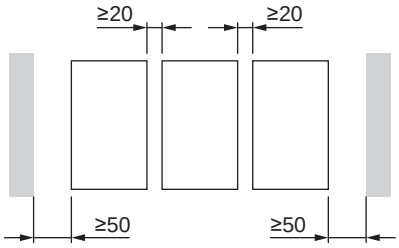

Arrangement on top of each other

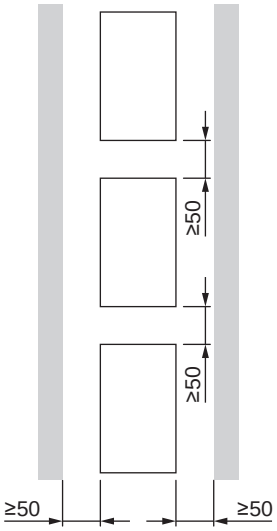

Sinus motor filter SMF

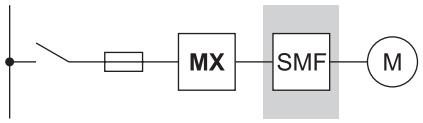

The use of the option >*pDRIVE*< *SMF* is recommended:

- in case of >*pDRIVE*< *MX pro* standard drives in order to arise nearly sinusoidal motor voltage. Therefore, additional noises at the motor are totally prevented.
- for >*pDRIVE*< *MX pro* standard drives in the power range ≤ 75 kW to observe the EMC directive in case of unscreened motor cables.
- for >*pDRIVE*< *MX pro* ...-MV inverters and step-up transformers for medium voltage motors up to 6 kV.

The option >*pDRIVE*< *SMF* is connected at the output side of the inverter into the connection to the motor.

For operation with a step-up transformer to > 1000 V motor voltage, the option >*pDRIVE*< *SMF* is absolutely necessary.

For standard drives the use of the option >*pDRIVE*< *SMF* is only permitted combined with control method "V/f" !

Set parameter B3.40 "Output filter" of the inverter to "2 .. Sinus filter" for the operation with option >*pDRIVE*< *SMF*. Thus, at all MX eco & pro the pulse frequency is fixed to 4 kHz. Therefore a reduction of power or of the max. ambient temperature must be considered.

Furthermore, consider the reduced output voltage due to the voltage drop at the sinus motor filter.

	General technical data
Operating voltage	MX eco & pro 4V: 3AC 0...480 V MX pro 6V: 3AC 0...690 V
Operating frequency	0...100 Hz
Pulse frequency	>*pDRIVE*< *MX pro*: 4 kHz (corresponding setting at the inverter necessary) >*pDRIVE*< *MX pro* ...-MV: 3 kHz (400 V), 2.5 kHz (690 V)
Overload capability	150 % for 60 s per 10 min, 165 % for 2 s
Voltage drop	approx. 10 %
Ambient temperature	+5...+50 °C (up to 55 °C with derating)
Storage temperature	-25…+70 °C
Altitude	0...1000 m (up to 3000 m with derating)
Vibration resistance	1.5 mm at 3...13 Hz, 1 g at 13...200 Hz according to IEC/EN 60068-2-6
Shock resistance	15 g for 11 ms according to IEC/EN 60068-2-27
Approvals	CE, UR, cUR, GOST

HMHF
8 P01 325 EN.04/04

	Option >*pDRIVE*<					
	SMF 480/11	SMF 480/16	SMF 480/33	SMF 480/66	SMF 480/95	SMF 480/180
Order number	8 P01 148	8 P01 149	8 P01 150	8 P01 151	8 P01 152	8 P01 153
Nominal current @50°C	11 A	16 A	33 A	66 A	95 A	180 A
Protection degree	IP20					
Losses	50 W	70 W	120 W	180 W	250 W	400 W
Weight	9 kg	11 kg	24 kg	47 kg	99 kg	125 kg
Dimension A1	335 mm	375 mm	470 mm	650 mm	780 mm	1130 mm
Dimension A2	280 mm	320 mm	380 mm	530 mm	650 mm	880 mm
Dimension B1	120 mm	120 mm	150 mm	210 mm	250 mm	310 mm
Dimension B2	100 mm	100 mm	120 mm	160 mm	200 mm	220 mm
Dimension C1	160 mm	190 mm	240 mm	280 mm	360 mm	375 mm
Fixing D1	∅ 6.6 mm	∅ 6.6 mm	∅ 6.6 mm	∅ 8.6 mm	∅ 11 mm	∅ 11 mm
Connection – L on the inverter side	Cable 0.7 m	Cable 0.7 m	Cable 0.9 m	Cable 1.5 m	Cable 1.6 m	Cable 2.7 m
– D2 on the motor side	Terminal 4 mm²	Terminal 6 mm²	Terminal 10 mm²	Terminal 25 mm²	Terminal 50 mm²	Terminal 150 mm²

HMHF

8 P01 325 EN.04/04

>pDRIVE< SMF 480/11 to 480/180

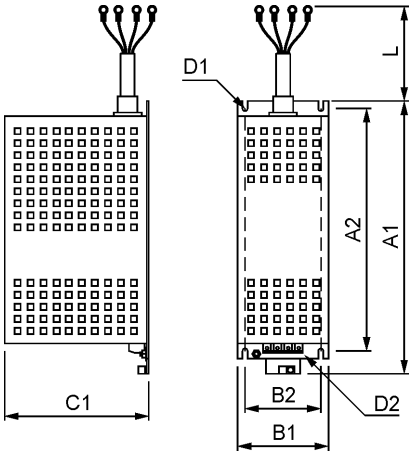

Required minimum distances

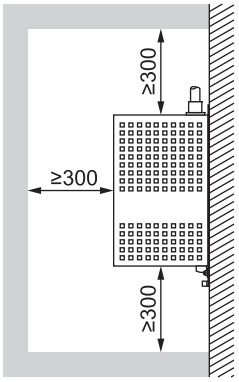

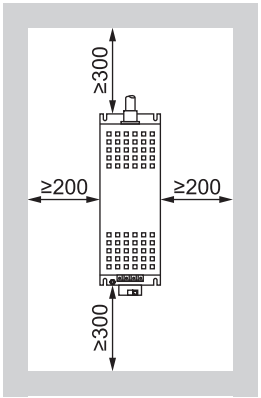

	Option >*pDRIVE*<				
	SMF 480/200	SMF 480/300	SMF 480/400	SMF 480/600	SMF 480/1200
Order number	8 P01 154	8 P01 155	8 P01 156	8 P01 157	8 P01 158
Nominal current @50°C	200 A	300 A	400 A	600 A	1200 A
Protection degree	IP00				
Losses	945 W	1360 W	1900 W	2370 W	5150 W
Weight	130 kg	165 kg	190 kg	235 kg	600 kg
Dimension A1	500 mm	500 mm	600 mm	710 mm	930 mm
Dimension B1	420 mm	420 mm	480 mm	480 mm	620 mm
Dimension B2	370 mm	370 mm	430 mm	430 mm	525 mm
Dimension C1	290 mm	345 mm	340 mm	370 mm	500 mm
Dimension C2	194 mm	231 mm	238 mm	258 mm	352 mm
Fixing D1	11 x 15 mm	11 x 15 mm	13 x 18 mm	13 x 18 mm	13 x 22 mm
Connection D2	Terminal 95 mm²	∅ 11 mm	∅ 11 mm	∅ 11 mm	4 x ∅ 11 mm

>pDRIVE< SMF 480/200

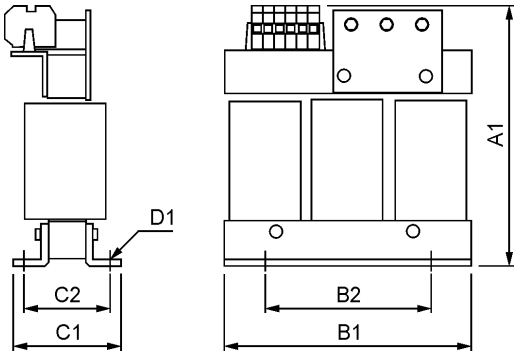

Required minimum distances

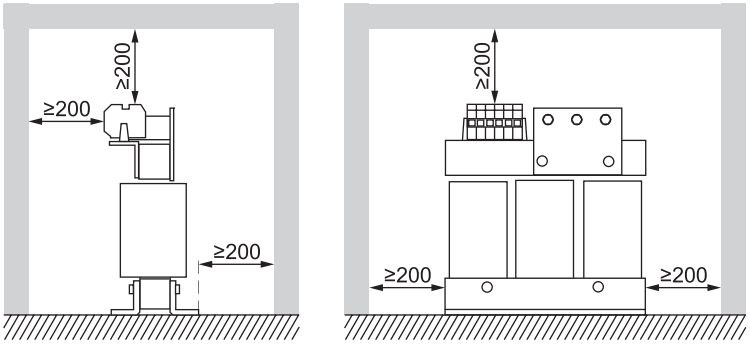

>pDRIVE< SMF 480/300 to 480/1200

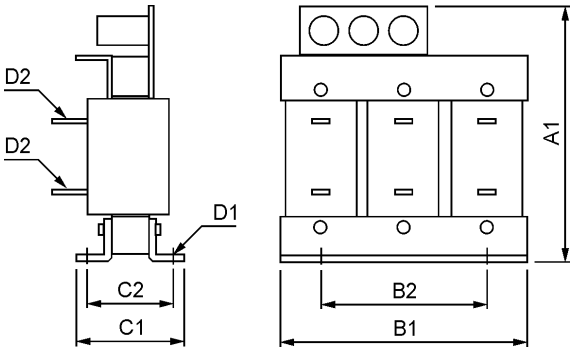

Required minimum distances

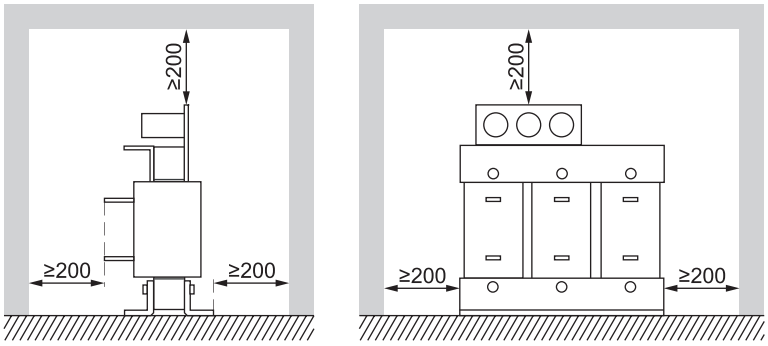

HMHF

8 P01 325 EN.04/04

Terminal box TER-BOX

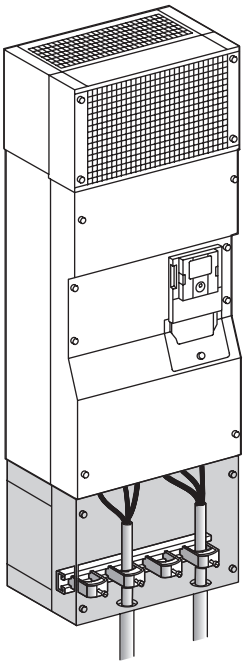

The terminal box option *>pDRIVE< TER-BOX* is a perfect supplement to the mounting of inverters outside of a cubicle, e.g. mounting directly at the wall. It increases the protection degree of the inverter, mechanically supports the power cables and it is a perfect possibility to connect the motor cable screens at the inverter.

The terminal box is installed directly at the bottom of the frequency inverter.

In case of *>pDRIVE< MX pro* inverters from 90 kW the terminal box is screwed onto the mounting plate or the wall because of the weight of the cables. The air channel for the cooling air of the power part is designed as a flange at the bottom of these terminal boxes to attach an additional air flow channel. This is an important condition to build up a separate air flow inside of a cubicle.

	General technical data	
Design	Connection box made of galvanised, well-conductive sheet steel	
Protection degree	*TER-BOX 130 … 320*:	IP21
	TER-BOX 310 … 1100:	IP31 (IP54 for air channel)
Cable entry	*TER-BOX 130 … 320*:	cable glands
	TER-BOX 310 … 1100:	rubber seal, fixing of the cables inside by means of cable clamps
Air inflow for cooling air of control part	*TER-BOX 130 … 320*:	sideways, (50 mm distance sidewards necessary)
	TER-BOX 310 … 1100:	front (no distance sidewards necessary)
Air inflow for cooling air of power part	*TER-BOX 130 … 320*:	behind the terminal box
	TER-BOX 310 … 1100:	through the air channel of the terminal box

HMHF
8 P01 325 EN.04/04

	Option >*pDRIVE*<				
	TER-BOX 130	TER-BOX 155	TER-BOX 175	TER-BOX 210	TER-BOX 230
Order number	8 P01 240	8 P01 241	8 P01 242	8 P01 243	8 P01 244
Weight	1.3 kg	1.5 kg	1.8 kg	2 kg	2.8 kg
Dimension A1	345 mm	365 mm	410 mm	410 mm	510 mm
Dimension A2	115 mm	105 mm	115 mm	115 mm	110 mm
Dimension A3	230 mm	260 mm	295 mm	295 mm	400 mm
Dimension B1	130 mm	155 mm	175 mm	210 mm	230 mm

>*pDRIVE*< *TER-BOX 130...230*

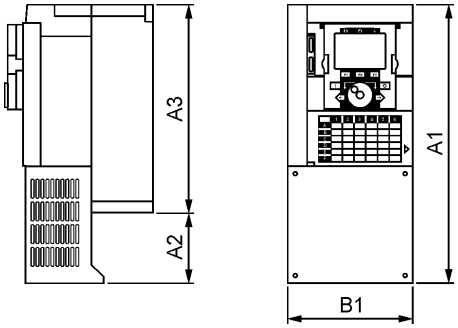

	Option >*pDRIVE*<		
	TER-BOX 240	TER-BOX 241	TER-BOX 320
Order number	8 P01 245	8 P01 246	8 P01 247
Weight	4 kg	5 kg	7 kg
Dimension A1	605 mm	730 mm	810 mm
Dimension A2	185 mm	180 mm	180 mm
Dimension A3	420 mm	550 mm	630 mm
Dimension B1	240 mm	240 mm	320 mm

>*pDRIVE*< *TER-BOX 240, 241 and 320*

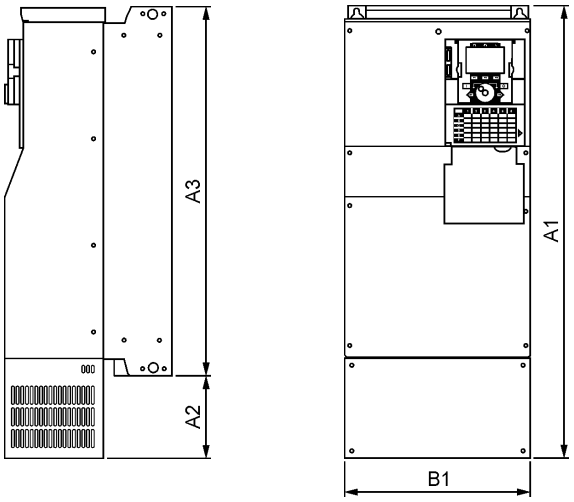

The options >*pDRIVE*< *TER-BOX* 310...1100 have a removable plate on both sides to install or remove the fans of the power part.

Thus, replacing the fans without disconnecting the power and control cables is possible. Therefor, a minimum distance sideways of 300 mm is necessary.

HMHF
8 P01 325 EN.04/04

	Option >*pDRIVE*< TER-BOX 310	TER-BOX 350	TER-BOX 330	TER-BOX 430
Order number	8 P01 248	8 P01 249	8 P01 250	8 P01 251
Weight	10 kg	12 kg	12 kg	15 kg
Dimension A1 *)	1140 mm	1322 mm	1505 mm	1565 mm
Dimension A2	220 mm	300 mm	315 mm	375 mm
Dimension A3	680 mm	782 mm	950 mm	950 mm
Dimension A4	75 mm	75 mm	75 mm	75 mm
Dimension A5	95 mm	172 mm	250 mm	250 mm
Dimension A6	65 mm	65 mm	65 mm	65 mm
Dimension B1	334 mm	374 mm	345 mm	445 mm
Dimension B2	250 mm	298 mm	285 mm	350 mm
Dimension C1	377 mm	377 mm	377 mm	377 mm
Fixing D1	4 x ∅ 11.5 mm	4 x ∅ 11.5 mm	4 x ∅ 11.5 mm	4 x ∅ 11.5 mm

	Option >*pDRIVE*< TER-BOX 585	TER-BOX 880	TER-BOX 1100
Order number	8 P01 252	8 P01 253	8 P01 254
Weight	20 kg	25 kg	35 kg
Dimension A1 *)	1565 mm	1865 mm	1865 mm
Dimension A2	375 mm	475 mm	475 mm
Dimension A3	950 mm	1150 mm	1150 mm
Dimension A4	75 mm	75 mm	75 mm
Dimension A5	250 mm	350 mm	350 mm
Dimension A6	65 mm	65 mm	65 mm
Dimension B1	600 mm	895 mm	1125 mm
Dimension B2	540 mm	835 mm	495 mm
Dimension C1	377 mm	477 mm	477 mm
Fixing D1	4 x ∅ 11.5 mm	4 x ∅ 11.5 mm	8 x ∅ 11.5 mm

*) Dimension A1 is the total height of the device including option >*pDRIVE*< *DCL-BOX* or >*pDRIVE*< *TRAFO-BOX*.

HMHF

8 P01 325 EN.04/04

>pDRIVE< TER-BOX 310...880

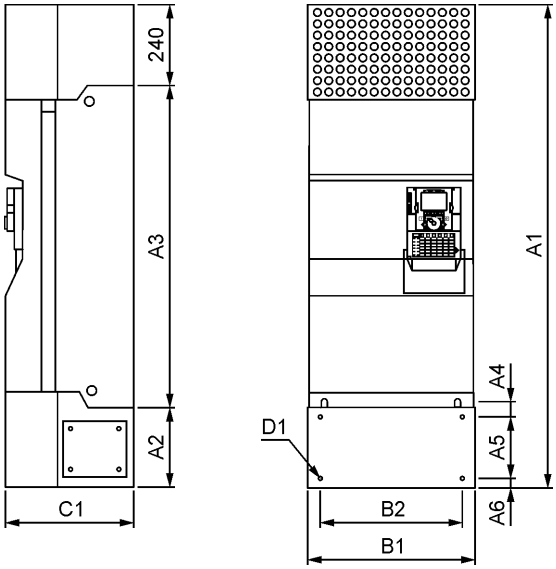

>pDRIVE< TER-BOX 1100

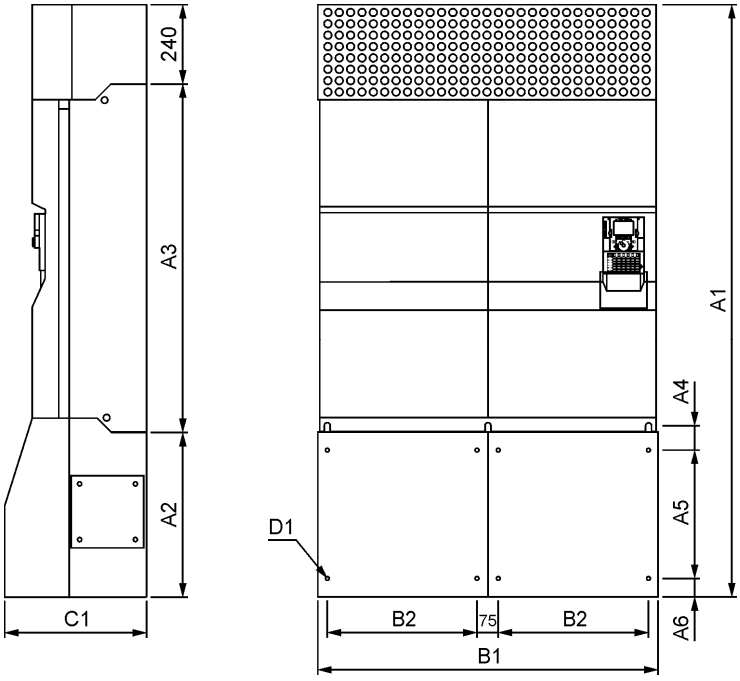

Mechanical connection to the air duct for separated air flow

	Option >*pDRIVE*<			
	TER-BOX 310	TER-BOX 350	TER-BOX 330	TER-BOX 430
Dimension B1	320 mm	360 mm	340 mm	440 mm
Dimension B2	280 mm	330 mm	250 mm	350 mm
Dimension B3	35 mm	30 mm	55 mm	55 mm
Dimension C1	145 mm	235 mm	235 mm	235 mm
Dimension C2	71 mm	170 mm	180 mm	180 mm
Dimension C3	40 mm	30 mm	40 mm	40 mm

	Option >*pDRIVE*<		
	TER-BOX 585	TER-BOX 880	TER-BOX 1100
Dimension B1	595 mm	890 mm	2 x 560 mm
Dimension B2	505 mm	800 mm	470 mm
Dimension B3	55 mm	55 mm	55 mm
Dimension C1	235 mm	235 mm	235 mm
Dimension C2	180 mm	180 mm	180 mm
Dimension C3	40 mm	40 mm	40 mm

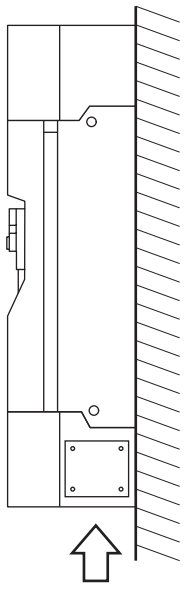

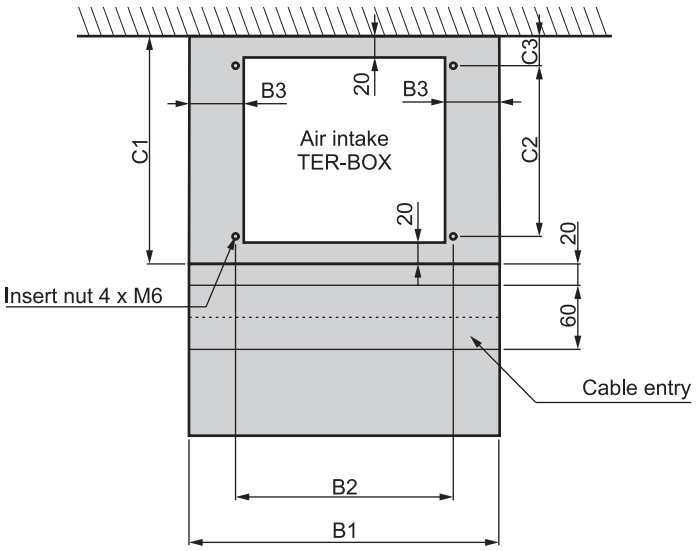

Flange mounting kit FLANGE

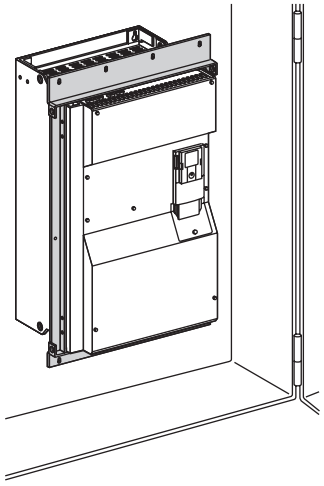

When the frequency inverter is mounted using the flange mounting kit, most of the losses accumulate outside the cubicle. Inside the cubicle you only have to ensure the dissipation of the losses of the control part.

There are several possibilities to dissipate the heat from the cubicle:

- Heat dissipation via the cubicle surface
- Heat dissipation via filter fan
- Heat dissipation via active cooling unit

In case of >*pDRIVE*< *MX pro* inverters from 90 kW the DC chokes or fan transformer must be built-in directly above the inverter to ensure sufficient cooling.

Without derating the temperature inside must not exceed +55°C. It might be necessary to install an internal fan for forced air circulation in order to avoid areas with too high temperature.

For the whole power range it is possible to exchange the fan of the power part without dismounting the inverter. Also mounting and dismounting of the whole inverter takes place inside the cubicle.

	General technical data
Design	Flange mounting kit made of compact sheet steel and glued gaskets
Protection degree outside	IP54
Protection degree inside	IP20 / IP00

	Option >*pDRIVE*< *FLANGE*						
	130x230	155x260	175x295	210x295	230x400	240x420	240x550
Order number	8 P01 180	8 P01 181	8 P01 182	8 P01 183	8 P01 184	8 P01 185	8 P01 186
Weight	2.7 kg	3.1 kg	3.7 kg	4.6 kg	4.9 kg	3.9 kg	4.2 kg
Dimension C1	60 mm	70 mm	70 mm	90 mm	90 mm	105 mm	105 mm

	Option >*pDRIVE*< *FLANGE*					
	320x630	310x680	350x780	330x950	430x950	585x950
Order number	8 P01 187	8 P01 188	8 P01 189	8 P01 190	8 P01 191	8 P01 192
Weight	4.9 kg	5.1 kg	3.6 kg	4.3 kg	4.7 kg	4.7 kg
Dimension C1	105 mm	150 mm	240 mm	240 mm	240 mm	240 mm

MX pro 4V0,75 … 4V75

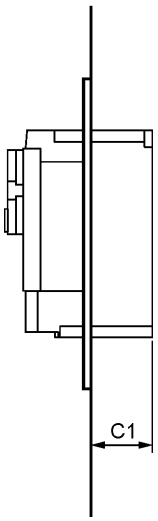

MX pro from 90 kW

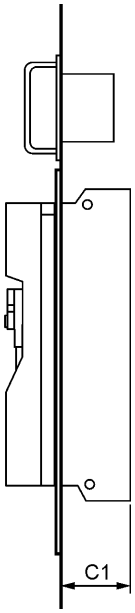

8 P01 325 EN.04/04

>pDRIVE< FLANGE 130x230

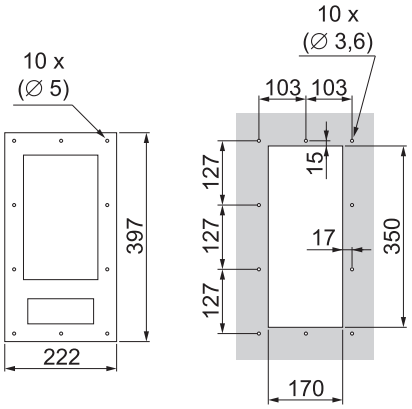

>pDRIVE< FLANGE 155x260

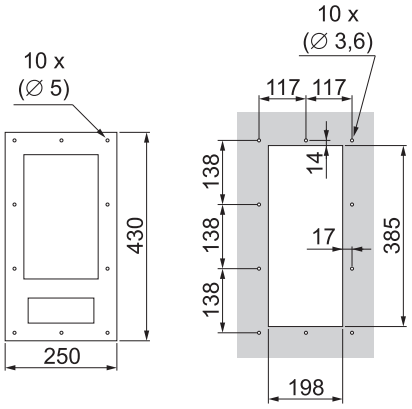

>pDRIVE< FLANGE 175x295

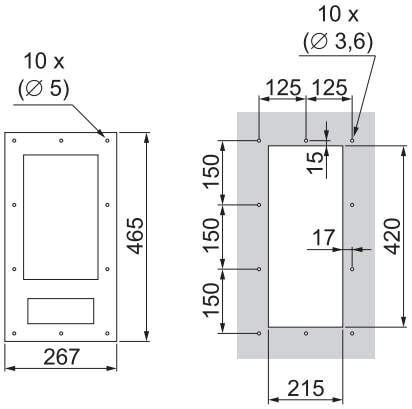

>pDRIVE< FLANGE 210x295

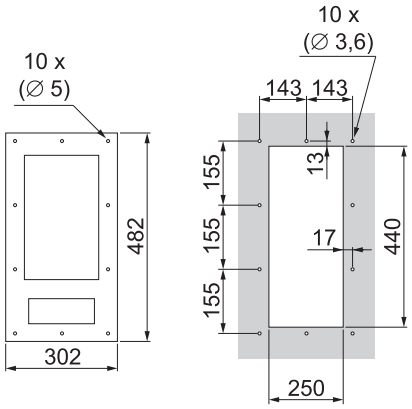

>pDRIVE< FLANGE 230x400

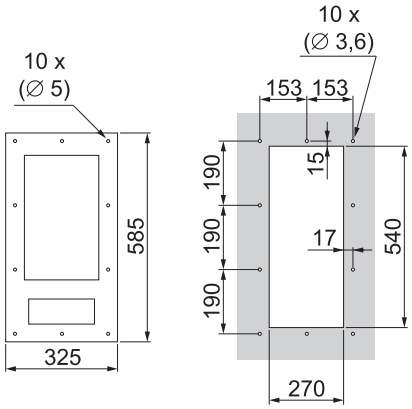

>pDRIVE< FLANGE 240x420

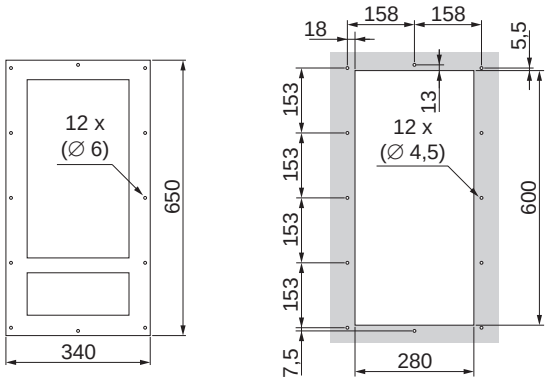

>pDRIVE< FLANGE 240x550

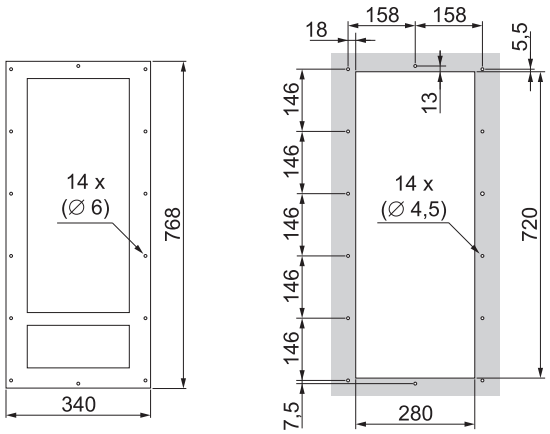

>pDRIVE< FLANGE 320x630

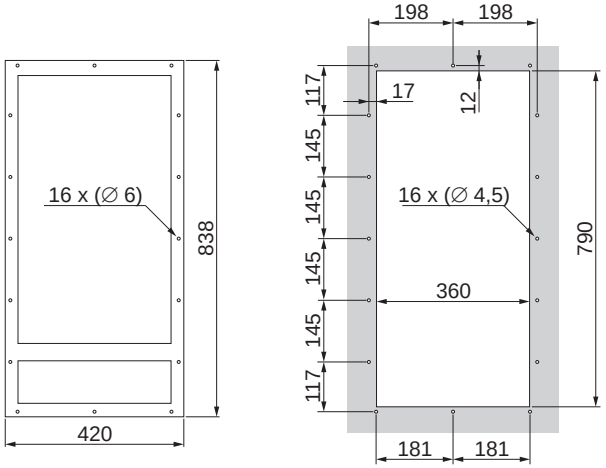

>pDRIVE< FLANGE 310x680

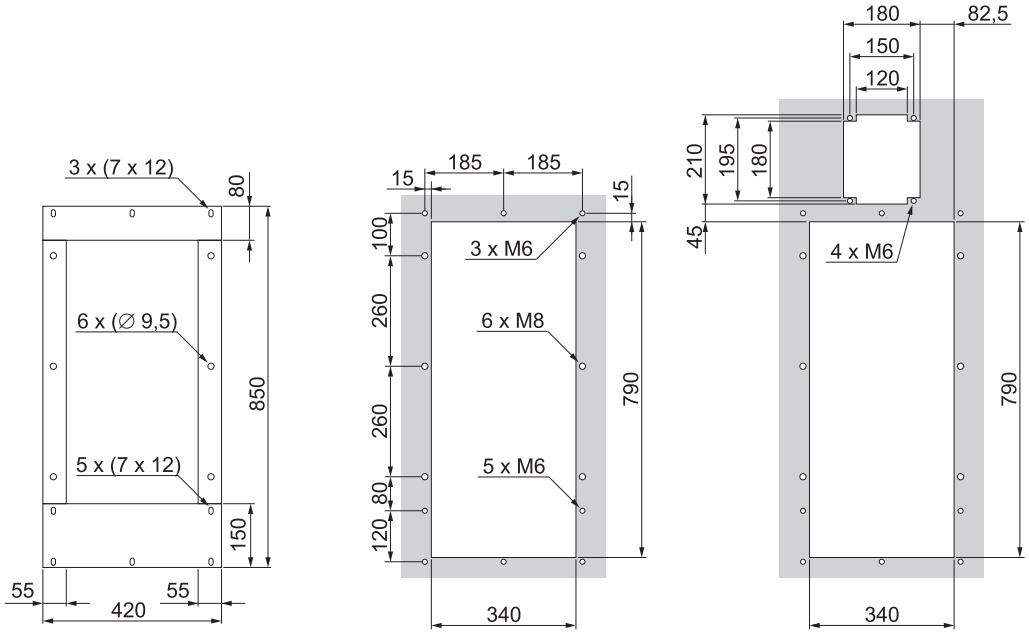

>pDRIVE< FLANGE 350x780

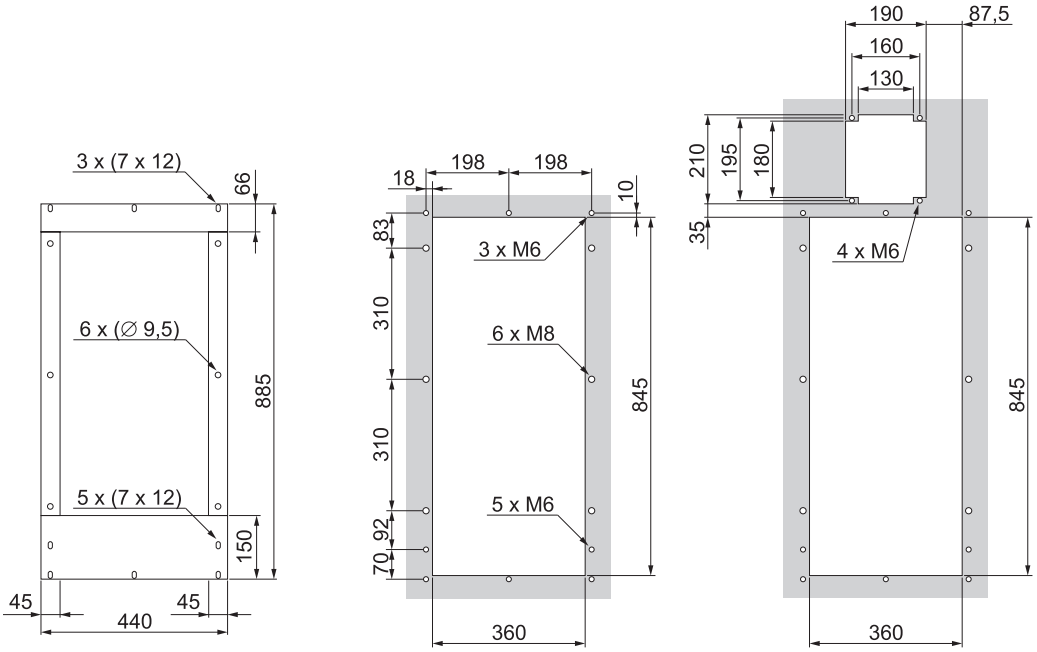

>pDRIVE< FLANGE 330x950

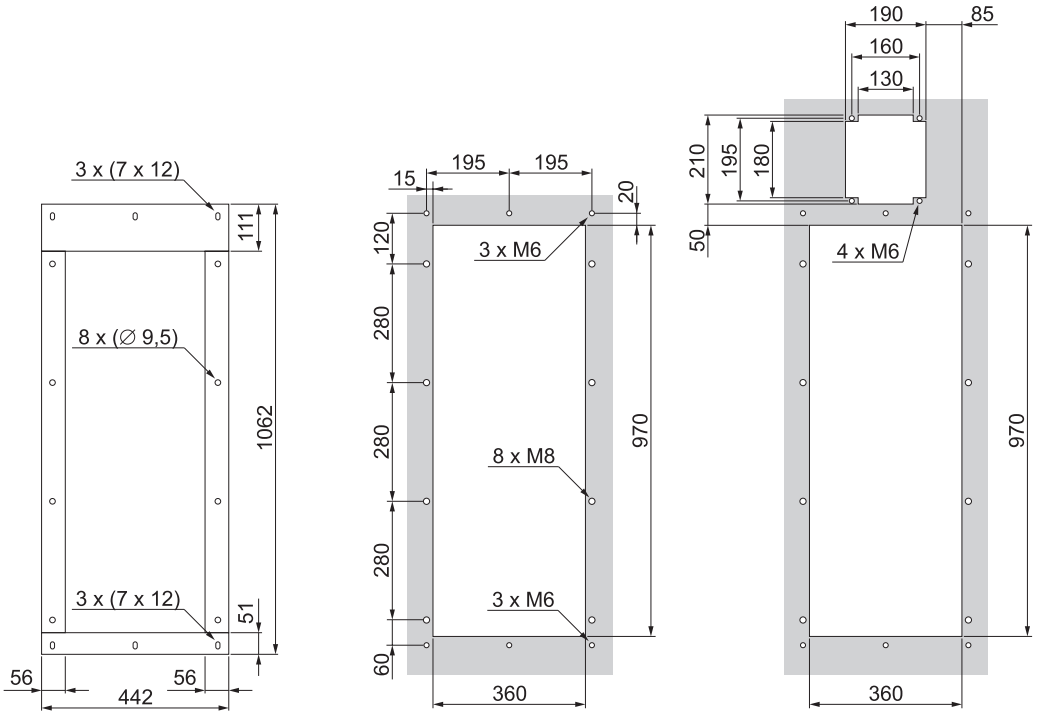

>pDRIVE< FLANGE 430x950

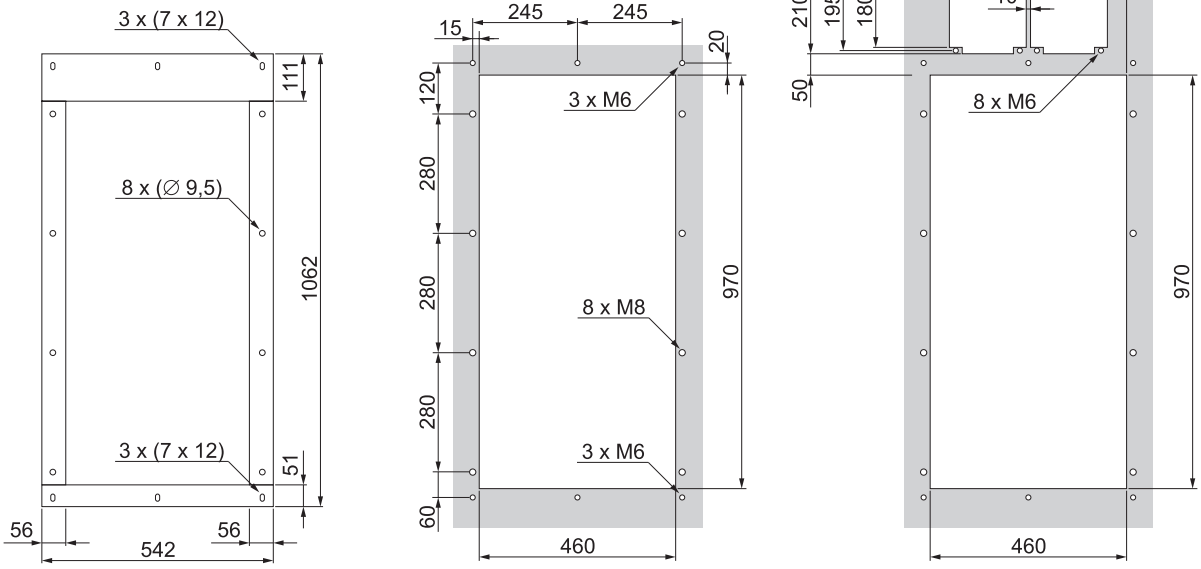

>pDRIVE< FLANGE 585x950

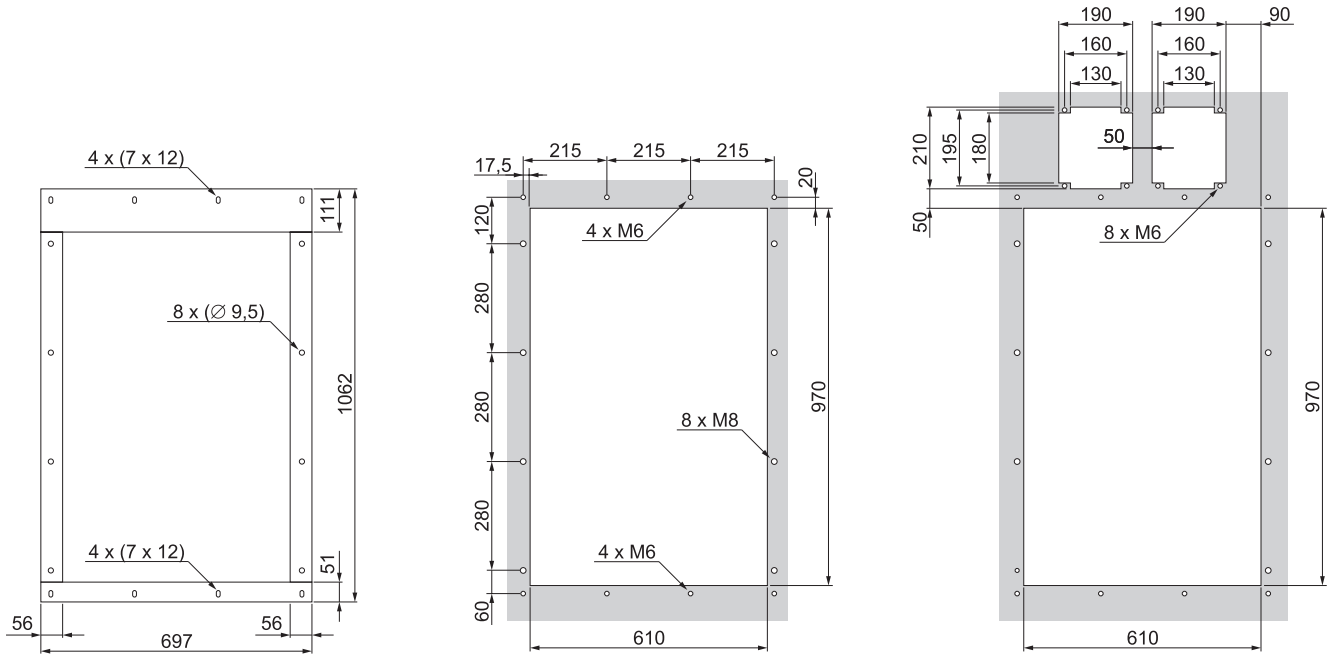

8 P01 325 EN.04/04

Cubicle mounting kit CMK

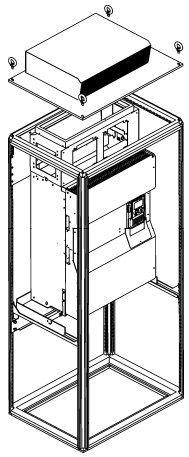

The cubicle mounting kit >*pDRIVE*< *CMK* is used for an optimal mounting of the frequency inverter in a Rittal TS8 cubicle. This option is suitable for >*pDRIVE*< *MX eco* & *pro* 4V from 90 kW.

There are three different types available:

- IP23 prepared for line reactor >*pDRIVE*< *NDU* or DC choke >*pDRIVE*< *DCL-BOX*
- IP54 with filter fan
- IP54 with separated air flow

>*pDRIVE*< *frequency inverter*		Dimensions of the cubicle			
		Height	Width	Depth	Type
MX eco 4V90	–	2000 mm	600 mm	600 mm	TS 8606
MX eco 4V110	*MX pro* 4V90/110	2000 mm	600 mm	600 mm	TS 8606
MX eco 4V132	*MX pro* 4V110/132	2000 mm	600 mm	600 mm	TS 8606
MX eco 4V160	*MX pro* 4V132/160	2000 mm	600 mm	600 mm	TS 8606
MX eco 4V200	*MX pro* 4V160/200	2000 mm	600 mm	600 mm	TS 8606
MX eco 4V250	*MX pro* 4V200/250	2000 mm	800 mm	600 mm	TS 8806
MX eco 4V315	*MX pro* 4V250/315	2000 mm	800 mm	600 mm	TS 8806
MX eco 4V355	–	2000 mm	1000 mm	600 mm	TS 8006
MX eco 4V400	*MX pro* 4V315/400	2000 mm	1000 mm	600 mm	TS 8006
MX eco 4V500	*MX pro* 4V400/500	2000 mm	1000 mm	600 mm	TS 8006
MX eco 4V630	*MX pro* 4V500/630	2000 mm	1200 mm	600 mm	TS 8206

The cubicle dimensions mentioned above must be observed in order to guarantee the fitting accuracy of the cubicle mounting kit.

Option >*pDRIVE*< *CMK-IP23*

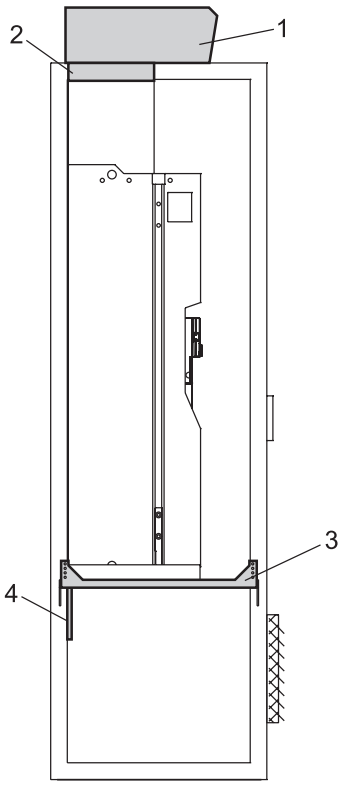

prepared for DCL-BOX

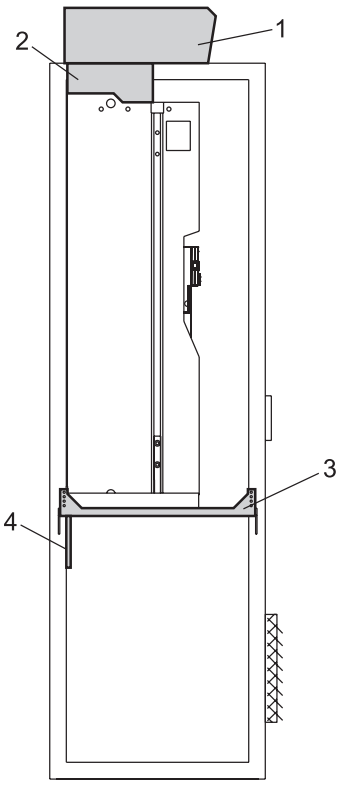

prepared for NDU

This mounting kit allows the built-in of the frequency inverter in Rittal TS8 cubicles according to protection degree IP23. In this case the input of the cooling air takes place by the cubicle door and the output through the top of the cubicle. The internal fan of the frequency inverter makes sure that there is enough cooling air for the cubicle.

This kit contains the following parts:

1. Cover hood
2. Air guide
3. Support with guide track
4. Bracket

\+ Fixing material

HMHF

For a higher protection degree there are two different IP54 solutions possible: IP54 with filter fan or separated air flow.

8 P01 325 EN.04/04

Option >*pDRIVE*< *CMK-IP54FL*

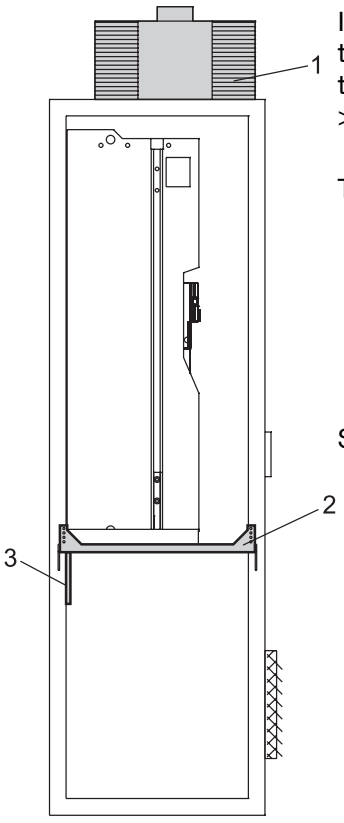

In case of protection degree IP54 with filter fans the cooling air inlet takes place through the filter in the cubicle door and the air outlet through the fan at the top of the cubicle. This type of the cubicle mounting kit requires the line reactor >*pDRIVE*< *NDU*!

This kit contains the following parts:

1. Filter fan
2. Support with guide track
3. Bracket

\+ Fixing material

Specification of the filter fan:

Volume of air flow:	1200 m^3/h
Nominal voltage:	3 AC 400 V, 50 Hz
Nominal current:	0.3 A
Sound pressure level:	73 dB(A)
Number of fans:	1 piece in CMK 9-x...CMK 12-x 2 pieces in CMK 13-x...CMK 14-x 3 pieces in CMK 15-x

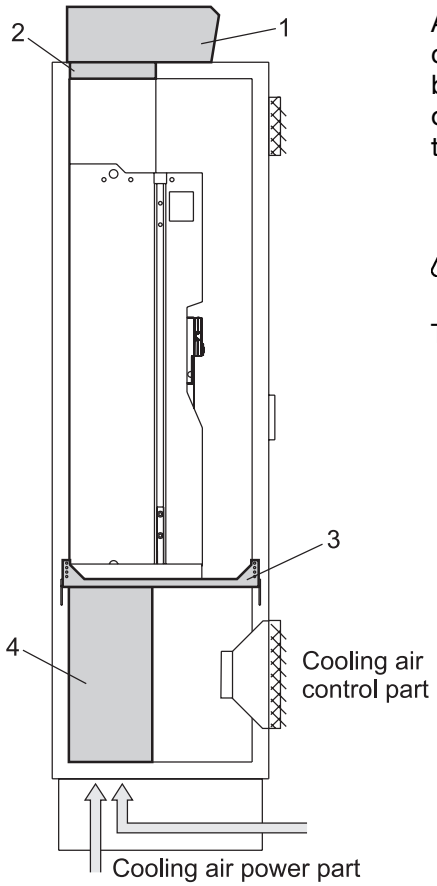

At the protection degree IP54 with separated air flow the input of the cooling air for the power part takes place by the cubicle plinth or from the bottom of the cubicle (raceway). The air outlet takes place through the top of the cubicle. The cooling of the control part takes place by the filter fan in the cubicle door or an air condition.

This type of the cubicle mounting kit requires the DC choke >*pDRIVE*< *DCL-BOX*!

This kit contains the following parts:

1. Cover hood
2. Air guide
3. Support with guide track
4. Air channel

\+ Fixing material

The information about the losses, the dimensioning of the fans (necessary volume of cooling air) and the dimensions of the air inlet and outlet will be found in the mounting instructions of the respective inverter.

Replacement kit RMK

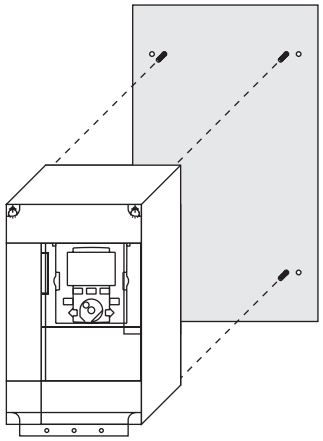

By using the option *>pDRIVE< RMK* existing *>pDRIVE< MX basic & plus* devices can be replaced by the new product line *>pDRIVE< MX eco & pro* without anew drilling.

Following devices can be replaced easily with this option:

- *>pDRIVE< MX basic* 15/18...55/75 in 400 V design
- *>pDRIVE< MX plus* 04...55/75 in 400 V design
- *>pDRIVE< MX plus* 04...22/30 in 500 V design

	General technical data
Design	Mounting kit made of galvanised sheet steel

	Option *>pDRIVE< RMK*								
	BG-A/4,0	BG-A/5,5	BG-B/7,5	BG-B/11	BG-A,B/6V	BG-1/ 15-22 + 6V	BG-1/ 30-37	BG-2/45	BG-2/55-75
Order number	8 P01 470	8 P01 471	8 P01 472	8 P01 473	8 P01 474	8 P01 475	8 P01 476	8 P01 477	8 P01 478
Weight	1.2 kg	1.2 kg	1.6 kg	1.6 kg	2.3 kg	4.7 kg	6.1 kg	4.6 kg	4.8 kg
Dimension A1	410 mm	410 mm	410 mm	410 mm	420 mm	500 mm	546 mm	815 mm	865 mm
Dimension A2	390 mm	390 mm	390 mm	390 mm	390 mm	475 mm	529 mm	714 mm	714 mm
Dimension B1	185 mm	185 mm	240 mm	240 mm	240 mm	240 mm	240 mm	350 mm	350 mm
Dimension B2	150 mm	150 mm	200 mm	200 mm	200 mm	195 mm	206 mm	310 mm	310 mm
Dimension C1	12 mm	12 mm	12 mm	12 mm	30 mm	150 mm	205 mm	22 mm	22 mm
Dimension D1	7 mm	7 mm	7 mm	7 mm	7 mm	8 mm	8 mm	10 mm	10 mm
Dimension D2	–	–	–	–	–	–	–	M8	M8

>pDRIVE< RMK BG-A, BG-B & BG-2

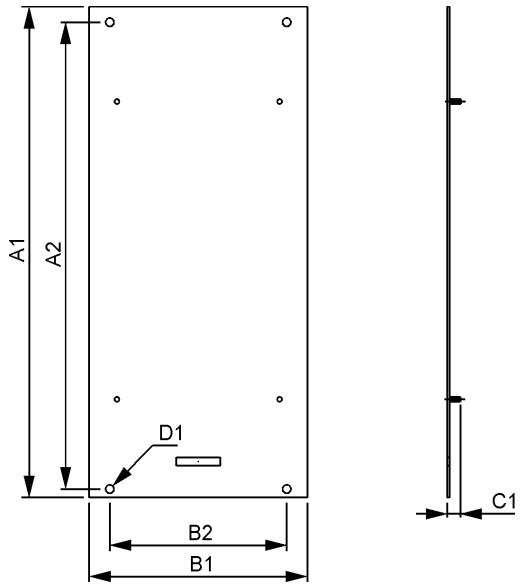

>pDRIVE< RMK BG-A,B/6V & BG-1

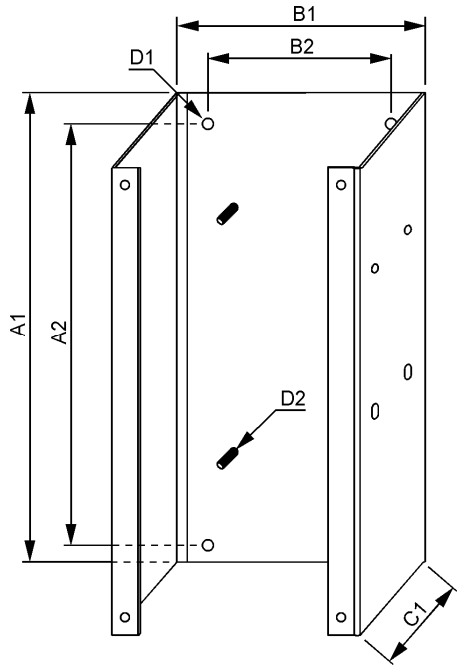

The individual mounting kits may differ marginally from the illustration. Some of them are also designed of two parts.

HMHF
8 P01 325 EN.04/04

>pDRIVE<
Schneider Electric Power Drives

a company of Schneider Electric

Schneider Electric Power Drives GmbH
Ruthnergasse 1
A-1210 Vienna
Phone: +43 (0)1 29191 0
Fax: +43 (0)1 29191 15
www.pdrive.com

>*pDRIVE*< stands for intelligent high-performance.

As one of the leading providers of inverters and motors, we know from experience that quality without compromising, consolidated advice and more flexible service lead to longstanding research and expertise.
Therefore we dedicate an essential part of our activities to permanently optimising processes and developing solutions for target groups which will meet even the highest demands.

www.pdrive.com

Information quick at hand - under www.pdrive.com.

In addition to company specifications we have made available to you a detailed list of technical data for all our products as well as helpful software tools to set up the parameters of our inverters.

The right to make technical changes is reserved.